US 20070038754A1

(19) United States

(12) Patent Application Publication

(10) Pub. No.: US 2007/0038754 A1

(43) Pub. Date: Feb. 15, 2007

Nunez et al.

(54) OPEN-INNOVATION NETWORK

(76) Inventors: **Enrique Nunez**, Nutley, NJ (US); **Miguel Perez**, Little Falls, NJ (US)

Correspondence Address:
PATENT DOCKET ADMINISTRATOR
LOWENSTEIN SANDLER PC
65 LIVINGSTON AVENUE
ROSELAND, NJ 07068 (US)

(21) Appl. No.: 11/503,361

(22) Filed: Aug. 11, 2006

Related U.S. Application Data

(60) Provisional application No. 60/707,342, filed on Aug. 12, 2005.

Publication Classification

(51) Int. Cl.
G06F 15/173 (2006.01)

(52) U.S. Cl. 709/226; 709/243

(57) **ABSTRACT**

An Open-Innovation Network wherein an Intermediary facilitates the research, creation and exchange (e.g., sale or license) of digital media (i.e., "Digital Innovations"). The Intermediary may participate in both the design and development of the Digital Innovations, and also acts as a broker between individuals or entities seeking to license or purchase the Digital Innovations. The Open-Innovation Network provides substantial value in a unique manner for those producing the digital media, as well as those licensing or purchasing said digital media.

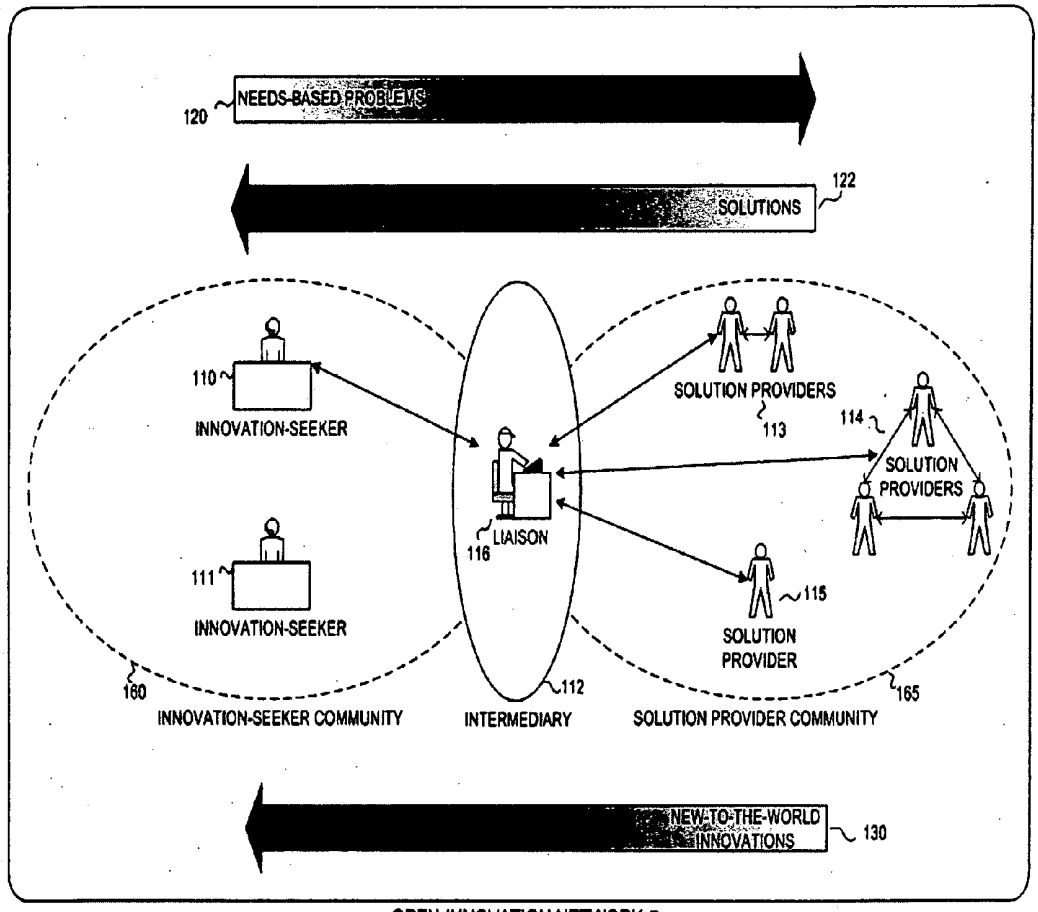

OPEN-INNOVATION NETWORK 150

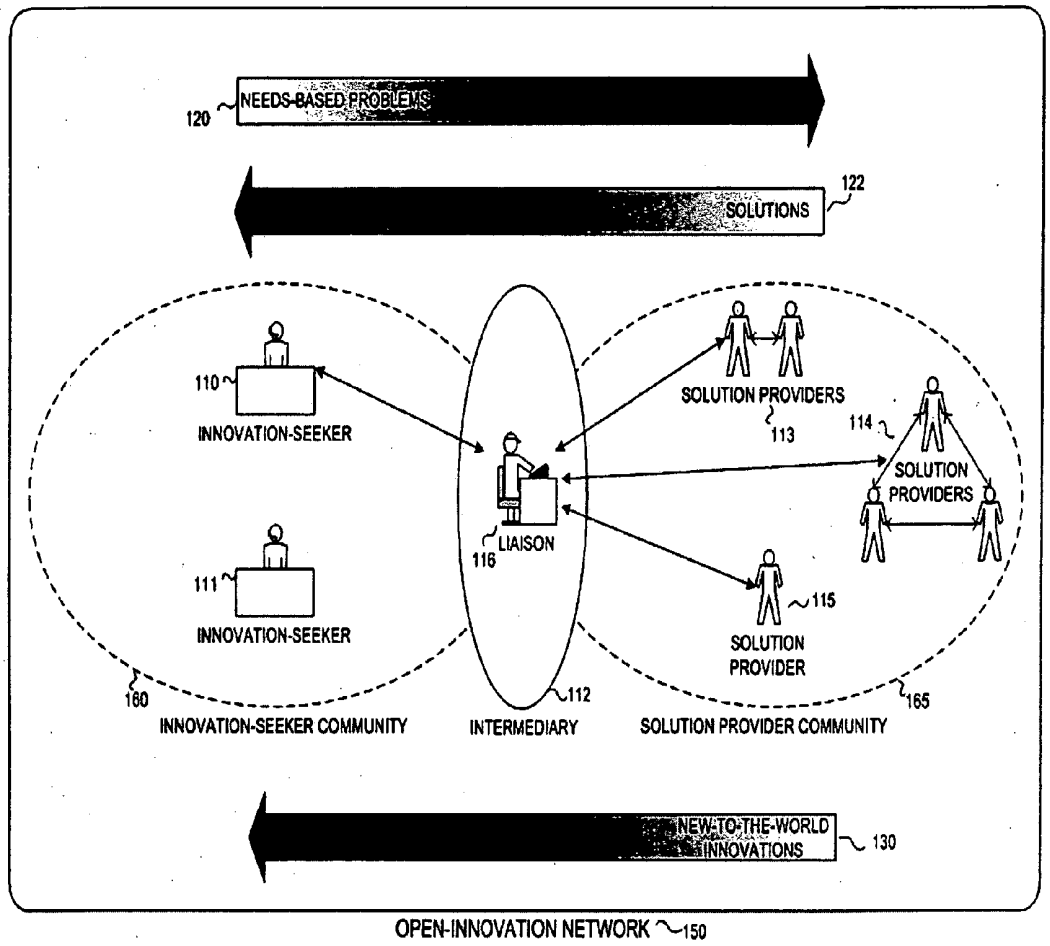
NEEDS-BASED PROBLEMS
120
SOLUTIONS
122
110
INNOVATION-SEEKER
111
INNOVATION-SEEKER
SOLUTION PROVIDERS
113
114
SOLUTION PROVIDERS
LIAISON
116
115
SOLUTION PROVIDER
160
INNOVATION-SEEKER COMMUNITY
112
INTERMEDIARY
SOLUTION PROVIDER COMMUNITY
165
NEW-TO-THE-WORLD INNOVATIONS
130
OPEN-INNOVATION NETWORK 150

Fig. 1

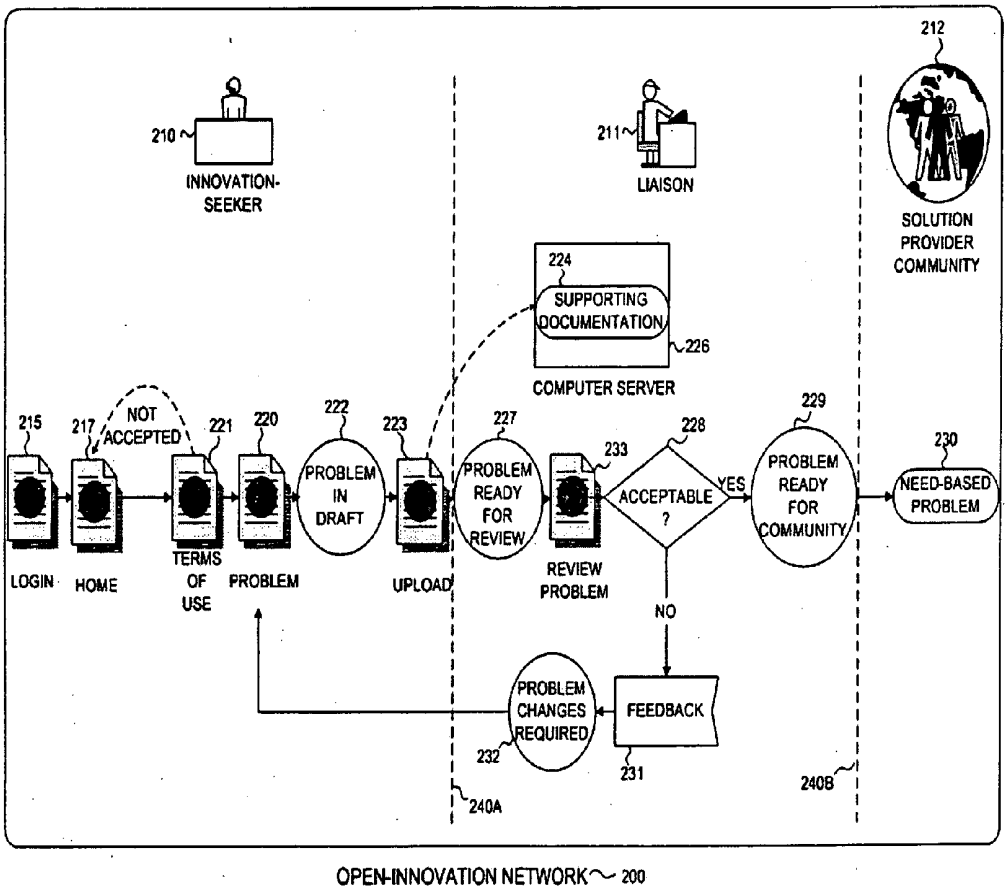

OPEN-INNOVATION NETWORK 200

Fig. 2

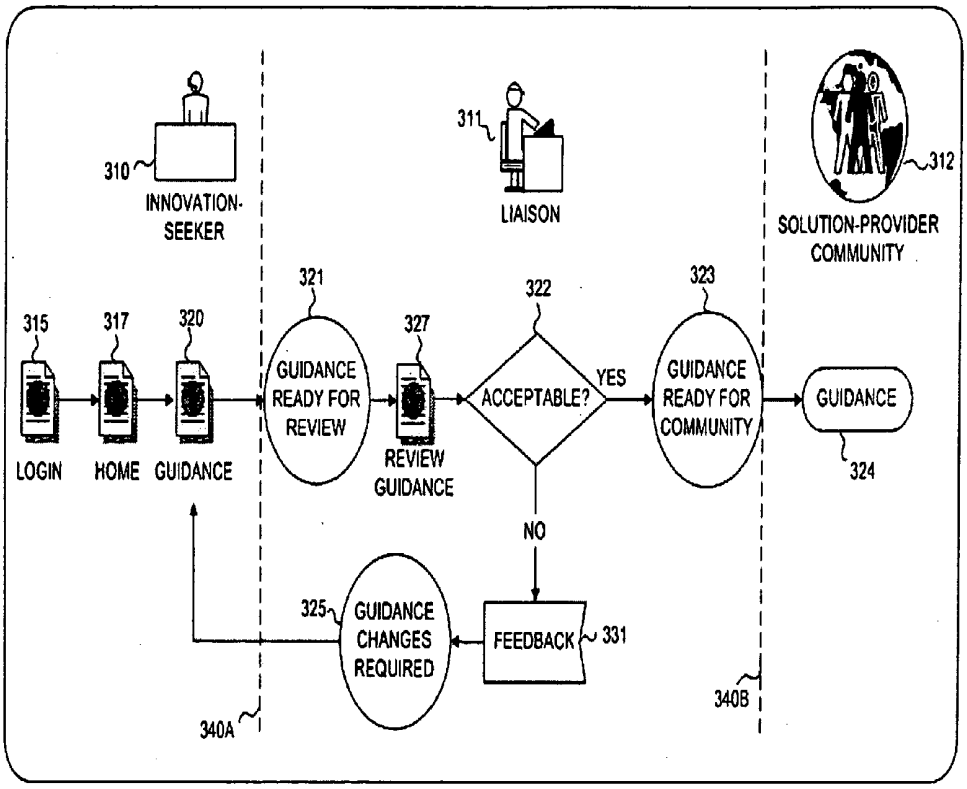

OPEN-INNOVATION NETWORK~300

Fig. 3

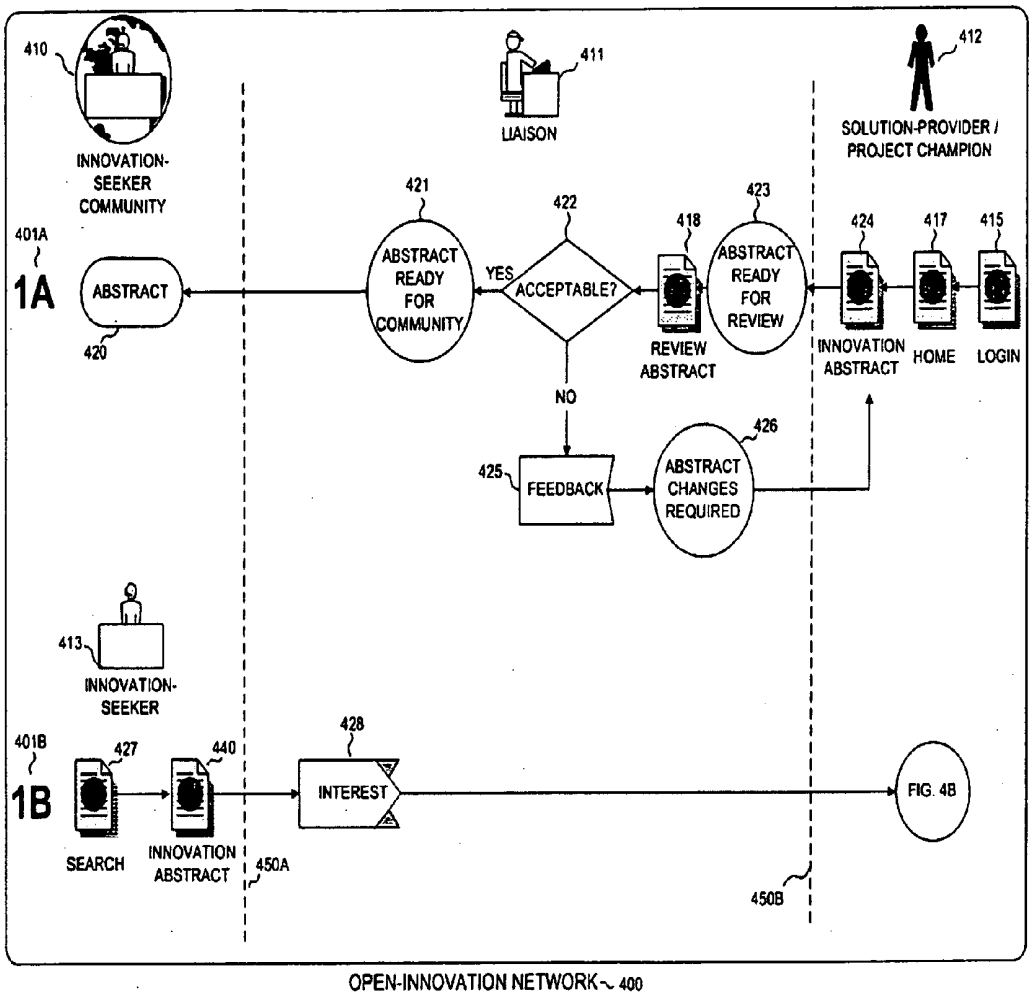

OPEN-INNOVATION NETWORK ~ 400

Fig. 4a

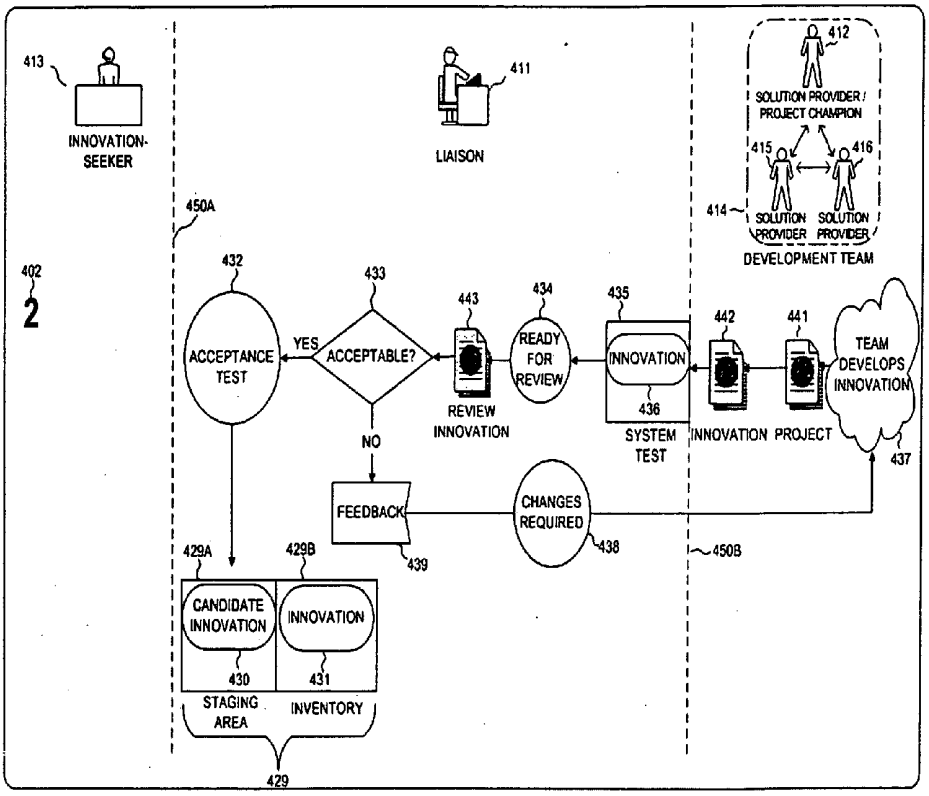

OPEN-INNOVATION NETWORK 400

Fig. 4b

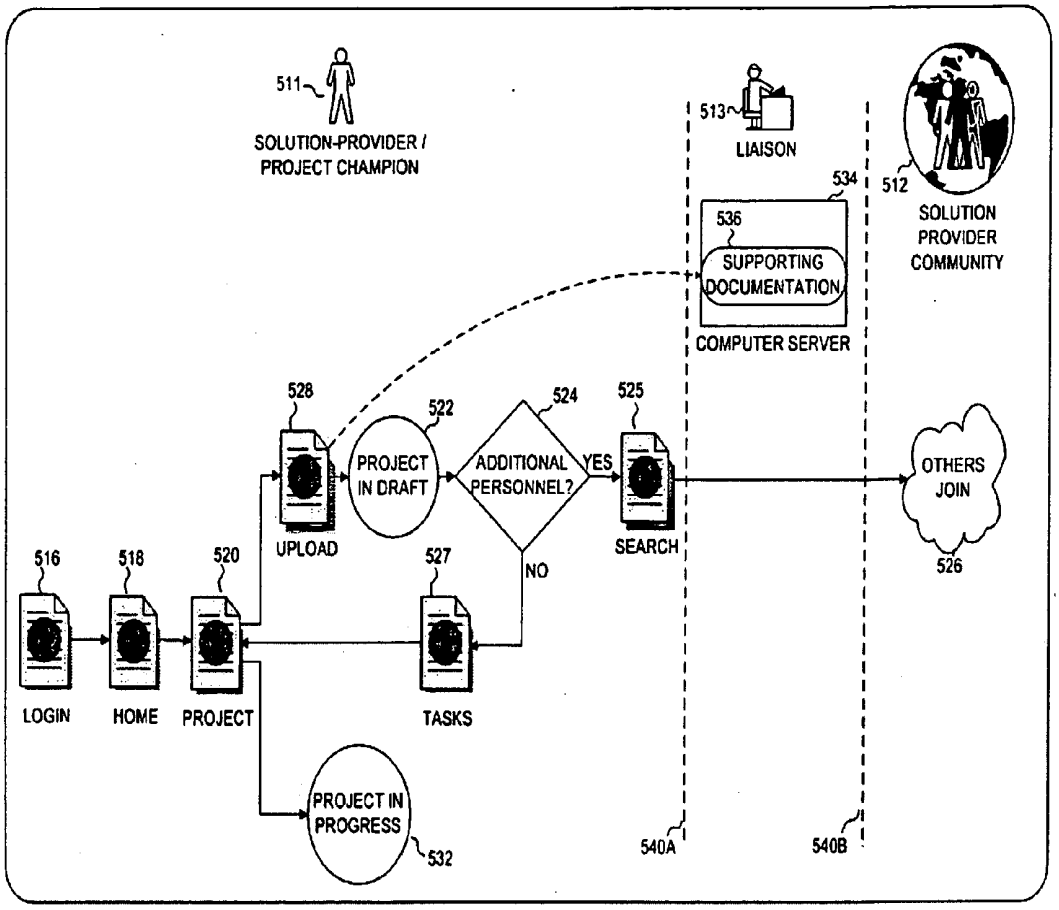

OPEN-INNOVATION NETWORK 500

Fig. 5

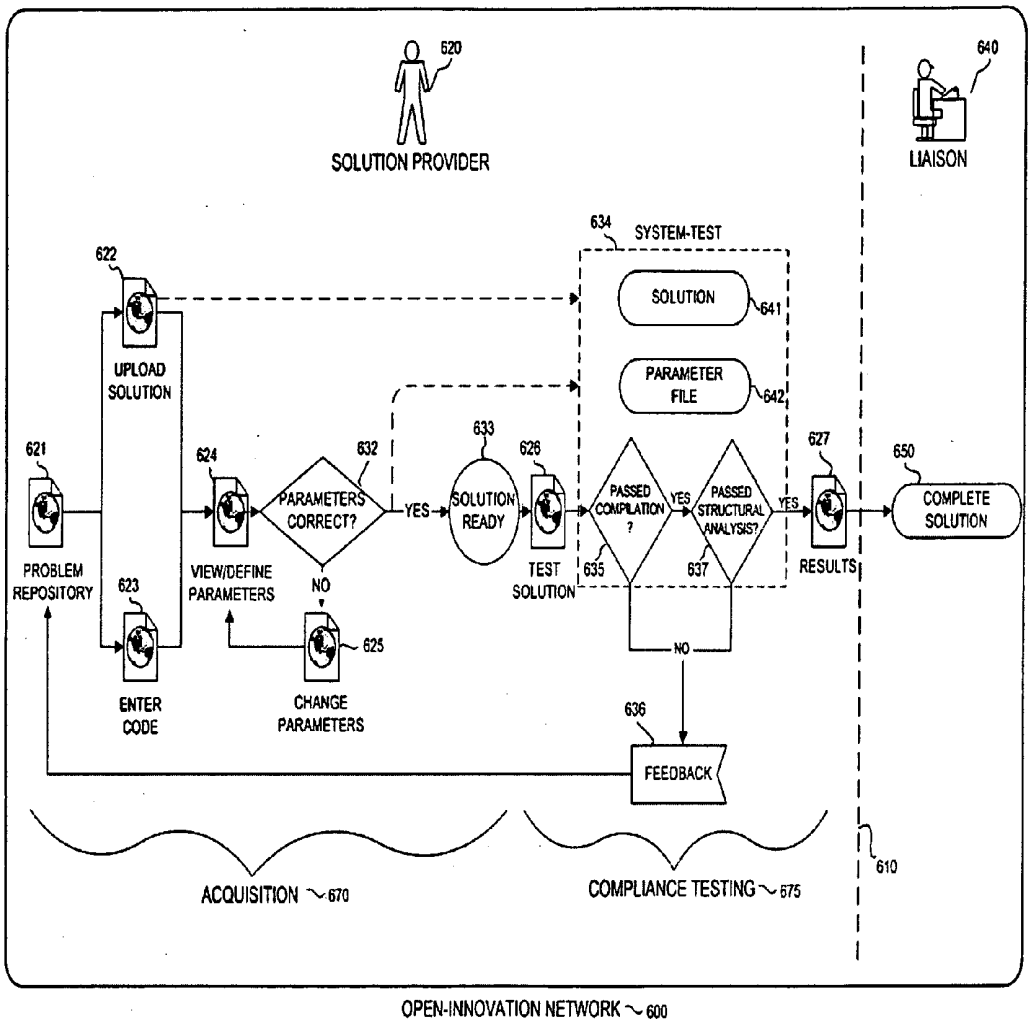

OPEN-INNOVATION NETWORK 600

Fig. 6

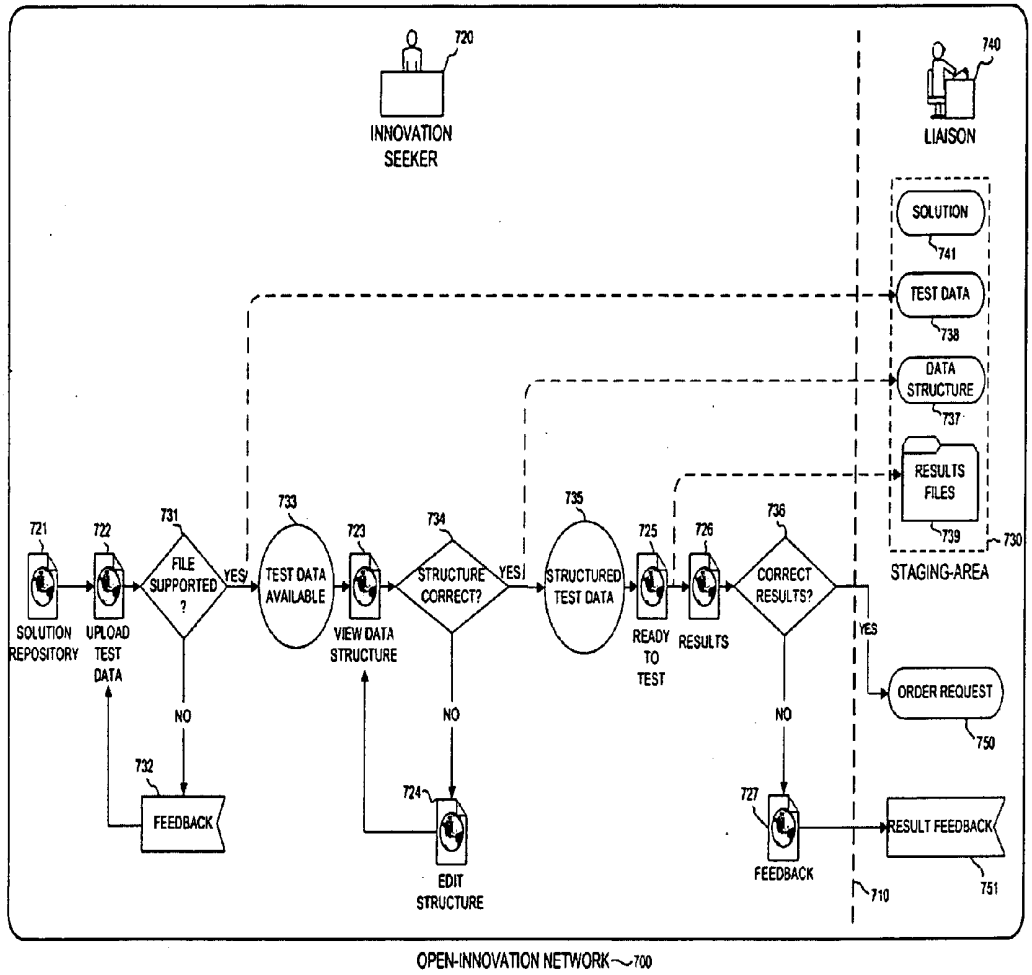
720
INNOVATION SEEKER
740
LIAISON
SOLUTION
741
TEST DATA
738
DATA STRUCTURE
737
RESULTS FILES
739
730
STAGING-AREA
721
SOLUTION REPOSITORY
722
UPLOAD TEST DATA
731
FILE SUPPORTED ?
YES
NO
732
FEEDBACK
733
TEST DATA AVAILABLE
723
VIEW DATA STRUCTURE
734
STRUCTURE CORRECT?
YES
NO
724
EDIT STRUCTURE
735
STRUCTURED TEST DATA
725
READY TO TEST
726
RESULTS
736
CORRECT RESULTS?
YES
NO
727
FEEDBACK
ORDER REQUEST
750
RESULT FEEDBACK
751
710
OPEN-INNOVATION NETWORK 700

Fig. 7

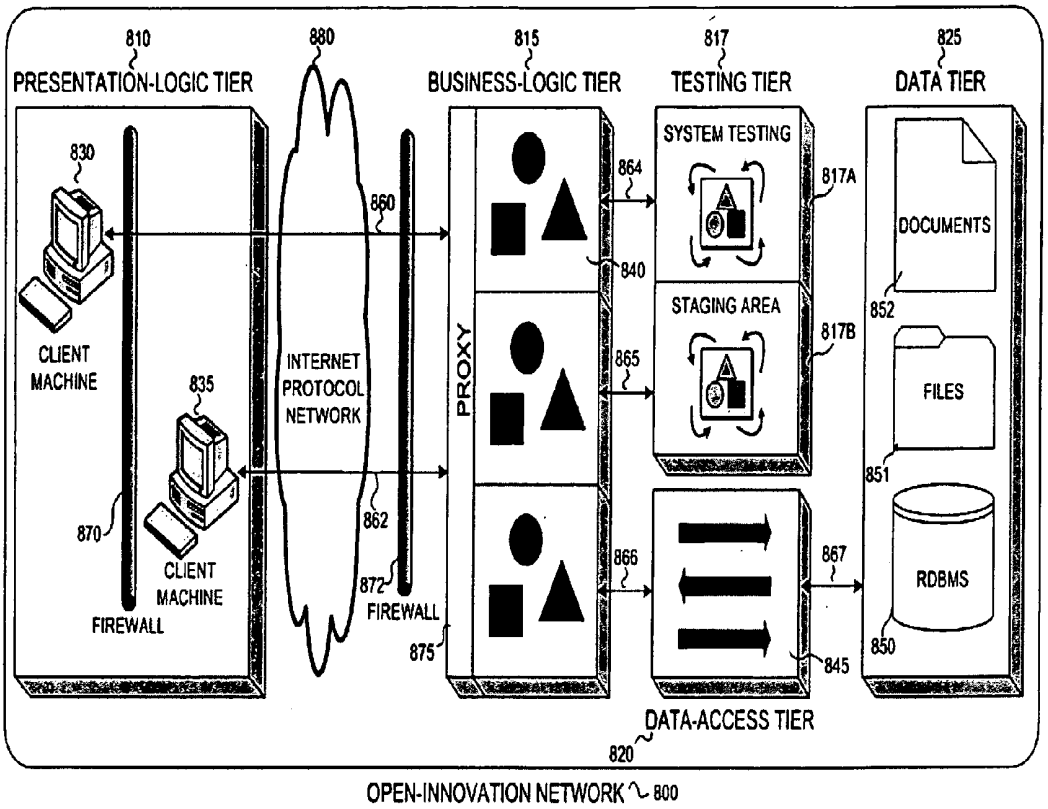
810
PRESENTATION-LOGIC TIER
880
815
BUSINESS-LOGIC TIER
817
TESTING TIER
825
DATA TIER
830
CLIENT MACHINE
835
CLIENT MACHINE
870
FIREWALL
INTERNET PROTOCOL NETWORK
860
862
872
FIREWALL
875
PROXY
840
864
865
866
SYSTEM TESTING
STAGING AREA
817A
817B
867
845
DATA-ACCESS TIER
820
DOCUMENTS
852
FILES
851
RDBMS
850
OPEN-INNOVATION NETWORK 800

Fig. 8

OPEN-INNOVATION NETWORK

CROSS REFERENCE TO RELATED APPLICATION

[0001] This application claims the benefit of U.S. Provisional Application Ser. No. 60/707,342 filed on Aug. 12, 2005. The entire disclosure of U.S. Provisional Application Ser. No. 60/707,342 is incorporated by reference herein.

FIELD OF THE INVENTION

[0002] The present invention relates to a system and method for research, creation, marketing and exchange (e.g., sale and/or license) of digital media through a collaborative network-based electronic marketplace.

BACKGROUND OF THE INVENTION

[0003] Historically, only large firms could compete in sectors that required massive expenditures on research and development (R&D). These enormous in-house expenditures also became daunting barriers to entry for would-be competitors, as challengers would have to develop their own in-house capabilities in order to compete.

[0004] However, the same firms that had invested massive amounts of resources on in-house R&D efforts have in recent times, wrestled with a dual challenge. Many of these firms have encountered fierce competition from upstarts that conduct little or no basic research of their own, while their own in-house R&D efforts fail to translate into economic returns. Consequently, many firms are seeking to generate innovation by tapping into outside expertise through a process known as open innovation.

[0005] Open innovation dictates that R&D should extend beyond the boundaries of the firm. Specifically, firms should cultivate outside ideas to advance their own business agendas, while leveraging internal ideas outside their current operations. Thus, open innovation offers an improved way to build value, and new opportunities to claim portions of that value.

[0006] Open innovation has been studied in various forms, with a significant amount of analysis conducted on the "open-source movement"—the software production model that leverages the distributed intelligence of a global community of software developers.

[0007] Related research has focused on various characteristics of the user innovator community, such as the leaders who coordinate the tasks of community members, lead users whose needs foreshadow general demand in the marketplace, user innovator incentives to encourage knowledge creation, and mechanisms by which community innovators obtain resources and assistance from the community. Other associated research has dealt with the issue more generally, such as managing the open innovation process, outsourcing innovation, and amateur innovation by enthusiasts.

[0008] User innovator communities, from which outside ideas may be harvested will always develop. If not explicitly created and controlled by firms, these communities will develop organically—and can be the source of significant innovation (e.g., Lego's Mindstorms community grew rapidly without firm involvement and helped exceed sales expectations), and customer loyalty (e.g., Harley Davidson's H.O.G. community helps ensure loyalty to the firm and its products), or immeasurable frustration (e.g., AT&T was plagued in the 1960s and 70s by phone phreaks—users who illegally manipulated the phone system).

[0009] For firms interested in open innovation, this suggests that it may be in the firm's best interest to actively create and leverage its user community. Nevertheless, direct control by firms attempting to manage open innovation can be costly and complex.

[0010] As such, there is a need in the art for a method and system which mitigates the above-described problems by facilitating the creation of digital media.

SUMMARY OF THE INVENTION

[0011] The present invention relates to a system and method for a network-based electronic marketplace (herein the "Open-Innovation Network") comprising an Intermediary configured to facilitate the creation of digital media and act as a broker between those that seek to license or purchase the media (i.e., Innovation-Seekers) and those that create the media (i.e., Solution-Providers).

[0012] According to an embodiment of the present invention, the Intermediary facilitates the research, creation, marketing and sale of digital media or "Digital Innovations" (i.e., the practical realization of a new or improved and useful idea, that is fully manifest as an individual or group of digital files and that has been created with the aim of entertainment and/or improving efficiency or effectiveness).

[0013] According to an embodiment of the present invention, the Intermediary may design and develop the Digital Innovations, and further act as a broker between the Innovation-Seekers and the Solution Providers.

[0014] According to an embodiment of the present invention, the Open-Innovation Network is a computer-based system which may include, but is not limited to, a combination of off-the-shelf software components. Advantageously, the Intermediary provides community leadership and incentives to encourage creation of the Digital Innovations. In addition, the Intermediary may provide screening mechanisms for reviewing the Digital Innovations, and provides for the exploitation (e.g., extraction of monetary value) of the Digital Innovations; and the method by which said Digital Innovations are assessed, marketed, and distributed.

[0015] According to an embodiment of the present invention, the system allows individuals interested in creating Digital Innovations a unique way to: join a targeted community of individuals or entities to share common interests, create a team consisting of other community members, search for Projects or develop Projects of their own creation, collaboratively develop and test Digital Innovations, provide performance feedback, transfer said Digital Innovations to Intermediary-controlled computer servers, and extract monetary value from said Digital Innovations.

[0016] According to an embodiment of the present invention, the system allows individual users, a group of individuals, individual legal entities, or a group of legal entities a unique way to: broadcast to a plurality of Solution-Providers a request for the creation of an Digital Innova-

tions, as well as a unique way to: search for, assess, and license or purchase said Digital Innovations.

BRIEF DESCRIPTION OF THE DRAWINGS

[0017] The present invention will be more readily understood from the detailed description of exemplary embodiments presented below considered in conjunction with the attached drawings, of which:

[0018] FIG. **1** illustrates an exemplary Open-Innovation Network, according to an embodiment of the present invention;

[0019] FIG. **2** is a workflow diagram showing a flow of operation of an exemplary embodiment of the present invention; wherein an Innovation-Seeker defines and submits a request for solution to a Need-Based Problem;

[0020] FIG. **3** is a workflow diagram showing a flow of operation of an exemplary embodiment of the present invention wherein an Innovation-Seeker defines and submits a request for Guidance;

[0021] FIGS. **4***a* and **4***b* are workflow diagrams showing a flow of operation of an exemplary embodiment of the present invention wherein a Solution-Provider creates a New-to-the-World Innovation;

[0022] FIG. **5** is a workflow diagram showing a flow of operation of an exemplary embodiment of the present invention wherein a Solution-Provider initiates a new Project;

[0023] FIG. **6** illustrates an exemplary process for conducting system testing of a final solution;

[0024] FIG. **7** illustrates an exemplary process for examining and assessing of a final solution by Innovation-Seekers to ensure said solution meets criteria set forth by a Problem, or is otherwise commercially valuable, according to an embodiment of the present invention;

[0025] FIG. **8** illustrates an exemplary system architecture of the Open-Innovation Network, according to an embodiment of the present invention.

[0026] It is to be understood that the attached drawings are for purposes of illustrating the concepts of the invention and may not be to scale.

DETAILED DESCRIPTION OF THE INVENTION

[0027] Provided below is a glossary of terms used in the present application. The scope of the present invention is not to be deemed limited by the definitions.

[0028] "Abstract"—includes, but is not limited to, an abbreviated Innovation-Seeker description of a Need-Based Problem developed by an Innovation-Seeker, or an abbreviated description of an Innovation developed by a Solution-Provider.

[0029] "Acceptance-Test" or "Acceptance Testing"—includes, but is not limited to, the examining and assessing of Innovations by Innovation-Seekers in the Staging Area to ensure said Innovations meet criteria set forth by the Need-Based Problem, or are otherwise commercially valuable (as would be the case with New-to-the-World Innovations).

[0030] "Alert"—includes, but is not limited to, a communication or communication system (e.g., an email-based system) that allows a Liaison and registered users to set criteria and be notified when criteria is met.

[0031] "Candidate-Innovation"—includes, but is not limited to, an Innovation that has not yet been purchased and resides in the Staging-Area. The Candidate Innovation may be deemed by a Liaison to have met all criteria set forth by the Need-Based Problem, or, alternatively, it may be a New-to-the-World Innovation that an Innovation-Seeker wishes to test.

[0032] "Collaboration"—includes, but is not limited to, an act of Innovation-Seekers, Liaisons, and Solution-Providers cooperating electronically to develop an Innovation using the Collaboration Functionality of the Open-Innovation Network.

[0033] "Collaboration Functionality"—the workflows and electronic tools provided by the Open-Innovation Network which facilitate the Collaboration, which include, but are not limited to: Gantt charts, a document management system with the ability to support various file types, instant messaging/chat, blog (web log), shared calendar, and a version control system.

[0034] "Community"—includes, but is not limited to, an Open-Innovation Network controlled computer environment whereby a broad range of individuals or entities that share a common interest may interact electronically, using computer-based tools, such as, for example, a Discussion Forum. According to an embodiment of the present invention, the Communities may be composed of a plurality of sub-communities.

[0035] "Computer"—includes, but is not limited to, any data processing device, such as a desktop computer, a laptop computer, a mainframe computer, a personal digital assistant, a server, a handheld device, or any other device able to process data.

[0036] "Development Team"—includes, but is not limited to, a plurality of Solution-Providers collaborating to create a specific New-to-the-World Innovation or a Solution to a Need-Based Problem.

[0037] "Direct-Link" or "Direct-Link System"—includes, but is not limited to, an embodiment of the present invention wherein Innovation-Seekers may select the Solution-Providers that work on or create a Solution to their request for Innovation. See also: In-House Services, Open-Link.

[0038] "Discussion Forum"—includes, but is not limited to, a general threaded discussion forum (i.e., not Project specific) that may be read by individuals accessing the Open-Innovation Network. According to an embodiment of the present invention, a registered user may be permitted to post general messages to the Discussion Forum.

[0039] "Electronic Media" or "Digital Media"—includes, but is not limited to, media based on digital codes, wherein the digital codes are represented by the binary numeral system. According to an embodiment of the present invention, the digital media may include, for example, digital audio, digital video, and other digital "content" that may be created, referred to and distributed via digital information processing machines or computers.

[0040] "End Date"—includes, but is not limited to, the date which a Candidate-Innovation is targeted for completion, posted to the Staging Area, and ready for examination by an Innovation-Seeker.

[0041] "Expiration Date"—is a characteristic of a Problem, which includes, but is not limited to, the due date imposed on a Solution-Provider by which they must create a Project with the intention of working on a specific Problem.

[0042] "Expired Problem"—A Problem that is no longer visible and can no longer be worked on by Solution-Providers because no Solution-Providers have initiated a Project by the Problem's Expiration Date.

[0043] "Expired Solution"—A Solution that has been deemed by a Liaison to have met all problem criteria, but has not been purchased by an Innovation-Seeker by the specified End Date and has therefore reverted back to inventory.

[0044] "Guidance"—includes, but is not limited to, "areas of interest" identified by Innovation-Seekers. According to an embodiment of the present invention, Solution-Providers may use the Guidance to ascertain whether commercial interest exists for a potential New-to-the-World Innovation.

[0045] "In-House Services" or "In-House Services System"—includes, but is not limited to, an embodiment of the present invention wherein an Intermediary designs, develops, manages, and/or leads the design and/or development of the Innovations—thus acting as an internal Solution-Provider/Project Champion. According to embodiment of the present invention, the In-House Services may utilize outside Solution-Providers to augment Development Teams. See also: Direct-Link, Open-Link.

[0046] "Innovation" or "Digital Innovation"—includes, but is not limited to, the realization of a new or improved and useful idea, that is fully manifest as an individual or group of digital files (e.g., text, image, video, animation, or audio files).

[0047] "Innovation-Seeker"—includes, but is not limited to, an individual user, group of individuals, legal entity, or group of legal entities that have registered with the Open-Innovation Network and seeks to license or purchase Innovations.

[0048] "Intermediarv" or "Liaison"—includes, but is not limited to, an entity in the Open-Innovation Network that works with Innovation-Seekers and Solution-Providers to design Innovations, source their development, and arrange for their delivery. According to an embodiment of the present invention, the Intermediary may utilize In-House Services, or may act as a "trusted broker" between Innovation-Seekers and outside Solution-Providers by: providing toolsets to help with Innovation development, a mechanism to verify Innovation results, community leadership to ensure order and quality, creating incentives for system participation, establishing screening mechanisms for contributors, ensuring rival options are given adequate consideration, and establishing methods by which Solution-Providers can extract monetary value from the creation of Innovations.

[0049] "Inventorv"—includes, but is not limited to, a designated area on a restricted Open-Innovation Network computer server that stores Expired Solutions and Innovations that have not been purchased.

[0050] "Marketspace"—includes, but is not limited to, a specific industry within which an Open-Innovation Network will be implemented (e.g., software, financial, and music industries) with the objective of facilitating the development of Innovations by Solution-Providers for that industry's Innovation-Seekers.

[0051] "Monetize"—A term that describes the extraction of monetary value from an Innovation.

[0052] "Need-Based Problem" or "Problem"—includes, but is not limited to, a specific problem that an Innovation-Seeker requests help in solving. According to an embodiment of the present invention, the Need-Based Problem including the criteria for solving the problem is posted by the Innovation-Seeker onto the Open-Innovation Network in a detailed manner (including the expected outcome).

[0053] "New-to-the-World Innovation"—includes, but is not limited to, an Innovation that was developed independent of a specifically communicated Problem (i.e., not in response to a Need-Based Problem). According to an embodiment of the present invention, New-to-the-World Innovations may be developed in response to one or more Guidances provided by one or more Innovation-Seekers, or independently developed and later matched with a Guidance in order to identify a potentially interested Innovation-Seeker.

[0054] "Open-Innovation Network"—includes, but is not limited to, a system wherein an Intermediary facilitates the research, creation and sale of Innovations. According to the present invention, the Open-Innovation Network has three primary embodiments, referred to as In-House Services, Direct-Link, and Open-Link.

[0055] "Open-Link" or "Open-Link System"—A manifestation of the present invention whereby Innovation-Seekers capture value from Innovations along three dimensions: No Risk/Cost-Effective/Differentiated. Aside from an annual subscription fee, Innovation-Seekers assume no risk for the development of Innovations, may assess Innovations before purchasing, and subsequently only pay for those Innovations they accept. Solution-Providers' limited overhead coupled with marketplace dynamics results in cost-effective Innovations. Innovations are developed by a potentially vast pool of talented Solution-Providers resulting in differentiated (i.e. distinct, non-commodity) offerings. See also: In-House Services, Direct-Link.

[0056] "Portfolio"—includes, but is not limited to, a grouping of problems or Innovations.

[0057] "Post"—includes, but is not limited to, an electronic transferring of files onto the Open-Innovation Network.

[0058] "Profile"—includes, but is not limited to, a grouping of Open-Innovation Network defined taxonomy fields that are used for classification and search. According to an embodiment of the present invention, a profile may be specifically designed for a particular aspect of the Open-Innovation Network, such as, for example, a registered user, an Innovation, a Solution, etc.

[0059] "Project"—An effort initiated by a Solution-Provider with the objective being to develop an Innovation.

[0060] "Project Champion"—includes, but is not limited to, the designation given to the Solution-Provider or Inter-

mediary that coordinates the performance of a Project and/or Solution, and further manages the Development Team.

[0061] "Project Forum"—includes, but is not limited to, a Project-specific threaded discussion forum that is used as a means of collaborating among Project members (i.e., Development Team, Liaisons, Innovation-Seekers).

[0062] "Rankings"—includes, but is not limited to, an Open-Innovation Network-provided system for performance feedback.

[0063] "Registered User"—includes, but is not limited to, any individual user, group of individuals, legal entity, or group of legal entities that have registered with the Open-Innovation Network, such as, for example, an Innovation-Seeker and a Solution-Provider.

[0064] "Search"—includes, but is not limited to, a function provided by the Open-Innovation Network wherein full text, keyword, or other like search may be performed.

[0065] "Solution"or "Final Solution"—includes, but is not limited to, a Solution-Provider developed Innovation that was created in response to a request for a Need-Based Problem.

[0066] "Solution-Provider"—includes, but is not limited to, an individual user, group of individuals, legal entity, or group of legal entities that have experience and/or training useful to a Marketspace, have registered with the Open-Innovation Network, and intend to develop and/or post Innovations. According to an embodiment of the present invention, a Solution-Provider may act as a Project Champion and/or a Team Member.

[0067] "Staging Area"—includes, but is not limited to, a designated area on the Open-Innovation Network for the performance of Acceptance Testing of an Innovation, Solution or Candidate-Innovation.

[0068] "System Test"—includes, but is not limited to, the performance of steps to confirm the correctness and interoperability of Final Solutions provided by at least one Solution-Provider.

[0069] "Task"—includes, but is not limited to, a unit of work that is generally assigned to a Development Team member by the Project Champion. According to an embodiment of the present invention, a Project may comprise a plurality of individual Tasks.

[0070] "Test"—A general term for a workflow phase wherein Innovations are examined and assessed on Open-Innovation Network computer servers. Includes Acceptance-Test and System Test.

[0071] "Team Member"—includes, but is not limited to, a Solution-Provider that is part of a Development Team.

[0072] "Toolset"—includes, but is not limited to, one or more electronic tools, preferably provided by the Open-Innovation Network, designed to help Solution-Providers with the development of Innovations.

[0073] "Value-Multiplier"—A term that describes the unique value offered to Innovation-Seekers and Solution-Providers through the use of the Open-Innovation Network. According to an embodiment of the present invention, with respect to Innovation-Seekers, value is imparted primarily along the three manifestations of the present invention: In-House Services, Direct-Link, and Open-Link. According to an embodiment of the present invention, with respect to Solution-Providers, value is conveyed by providing: a mechanism to monetize ideas and develop a reputation while not working directly for a firm; access to a Community, as well as a large pool of talented potential collaborators; and assistance validating, researching, refining and implementing ideas with the help of colleagues (e.g., Community), industry participants (e.g., Liaisons, Innovation-Seekers), and toolsets.

[0074] "Visitor"—Any visitor to the Open-Innovation Network website.

[0075] "Workflow"—includes, but is not limited to, a set of states, state transitions, rules, and actions, determined by the Open-Innovation Network, that Innovation-Seekers, Liaisons and Solution-Providers must follow during the development of Innovations (see examples); wherein

[0076] a "State" includes, but is not limited to, information that is accessible or viewable by a registered user when in a particular situation, as well as the allowable State Transitions;

[0077] a "State Transition" includes, but is not limited to, a set of Rules that causes the workflow to move into a different state, as well as define any actions that are to be taken when moving from the current state;

[0078] a "Rule" may allow the system to compare values. According to an embodiment of the present invention, if all the rules evaluate to true, then a transition is made, otherwise the workflow remains in its current state.

[0079] an "Action" may be used to dynamically retrieve information to be evaluated. According to an embodiment of the present invention, an action may be performed on state entry and state exit, and may be an element within a rule.

[0080] The present invention is described below with reference to FIGS. **1-8**. FIGS. **1-8** are intended to illustrate exemplary embodiments of the present invention. One having ordinary skill in the art will appreciate that alternative embodiments may be used and are within the scope of the present invention.

[0081] The following detailed description is divided into three sections. In the first section, the preferred embodiment of the present invention: the Open-Innovation Network is described. In the second section, the process for using the preferred embodiment of the present invention is described using six examples. Finally, in the third section, an exemplary embodiment of the system architecture in which the preferred methods of the invention may be practiced is described.

Section 1: A Description and Operation of the Method and System of the Invention

[0082] A method and system of the present invention is described below in conjunction with FIG. **1**. FIG. **1** depicts an Open-Innovation Network **150** comprising an Innovation-Seeker Community **160**, an Intermediary **112**, and a Solution-Provider Community **165**. According to an embodiment of the present invention, the Innovation-Seeker Community **160** comprises a plurality of Innovation-Seekers **110**, **111**, wherein the Innovation-Seekers **110**, **111** are those individuals, companies, legal entities, universities, etc.

which seek the creation of one or more Innovations. The Solution-Provider Community **165** comprises a plurality of Solution-Providers **113**, **114**, **115**, wherein the Solution-Providers **113**, **114**, **115** are those individuals or groups which have experience and/or training useful to a Marketspace and intend to develop and/or post Innovations.

[**0083**] According to an embodiment of the present invention, the Open-Innovation Network **150** is a network-based marketplace wherein an Intermediary **112** facilitates the creation of digital media and may act as a broker between the Innovation-Seekers **110**, **111** (i.e., those seeking the creation of Innovations) and Solution-Providers **113**, **114**, **115** (i.e., those that create said media). According to an embodiment of the present invention, the Open-Innovation Network **150** facilitates the discovery, development, screening and transfer of Innovations.

[**0084**] As described herein, the Open-Innovation Network **150** has three primary embodiments: the In-House Services System, the Direct-Link System, and the Open-Link System.

[**0085**] According to the In-House Services System embodiment of the present invention, the Intermediary **112** is configured to design, develop, and manage the creation of the Solutions. According to the Direct-Link System embodiment of the present invention, the Innovation-Seekers **110**, **111** select the Solution-Providers **113**, **114**, **115** to develop the requested Innovation.

[**0086**] According to the Open-Link System embodiment of the present invention, the Intermediary **112** (enabled through a Liaison **116**) acts as a broker between the Innovation-Seekers **110**, **111** and the potential Solution-Providers **113**, **114**, **115**. As such, in this embodiment, the Solution Providers **113**, **114**, **115** select which Problems to work on.

[**0087**] In all of the above-described embodiments, the Intermediary **112** may provide a toolset to facilitate the Innovation development, a mechanism to verify Innovation results, community leadership (for both Innovation-Seekers **110**, **111** and potential Solution-Providers **113**, **114**, **115**). In addition, the Intermediary **112** may also help define incentives for network participation, develops and enforces screening mechanisms for community participants, provides mechanisms for escrow and payment services, extract rents from transactions, and maintains the network.

[**0088**] Referring to FIG. **1**, the Open-Innovation Network **150** enables the development of Solutions **122** to specific client needs (i.e., Need-Based Problems **120**), as well as the development of New-to-the-World Innovations **130**. Thus, innovation may originate with either the Innovation-Seekers **110**, **111** or the Solution-Providers **113**, **114**, **115**.

[**0089**] According to an embodiment of the present invention, Need-Based Problems **120** are specific problems that Innovation-Seekers **110**, **111** request help in solving (i.e., by the creation of a Solution **122**). Generally, the criterion for solving these types of problems is posted by Innovation-Seekers **110**, **111** onto the Open-Innovation Network **150** in a detailed manner. According to an embodiment of the present invention, for a Need-Based Problem **120**, the Innovation-Seekers **110**, **111** may determine adequate compensation for Solutions **122** that successfully meet their criteria for success.

[**0090**] For example, an Innovation-Seeker **110** may begin the process of resolving a specific problem by working with the Intermediary **112** (i.e., via a Liaison **116**) to define the Need-Based Problem **120**, and, optionally, sets a maximum price for a successful Solution **122**.

[**0091**] Once the problem has been adequately defined, the Innovation-Seeker **110** may post the problem via the Intermediary **112**, optionally in an anonymous manner, to the Solution-Provider Community **165**. According to the Direct-Link embodiment of the present invention, based at least on the nature of the problem (i.e., the technical aspects of the problem), the Intermediary may prescreen and request that one or more Solution-Providers **113**, **114**, **115** in the Community **165** work on the particular problem at hand. In addition, the Intermediary **112** may interact with the Solution-Providers **113**, **114**, **115** to refine the Solutions **122**.

[**0092**] According to an embodiment of the present invention, the Intermediary **112** may refine the Solution based at least in part on prior experience with the problem type and/or with the Innovation-Seeker **110**, or based upon a review of the project documentation.

[**0093**] Once the Solutions **122** are finalized (i.e., a Final Solution is created), a number of Candidate Solutions may be presented to the Innovation-Seeker **110**, allowing the Innovation-Seeker **110** to review and select one or more desired Solutions **122**.

[**0094**] According to an embodiment of the present invention, the exchange of New-to-the-World Innovations **130** (i.e., Innovations that Solution-Providers **113**, **114**, **115** develop independent of any specifically communicated problem) is managed by the Intermediary **112**. According to this embodiment, the Intermediary **112** may negotiate licensing or outright sale of New-to-the-World Innovations **130** with the Innovation-Seekers **110**, **111**, or terms for licensing or outright sale may be negotiated directly by the Solution-Provider **113**, **114**, **115** that developed the Innovation.

[**0095**] According to an embodiment of the present invention, the Open-Innovation Network **150** allows the Innovation-Seekers **110**, **111** to obtain Solutions **122** and New-to-the-World Innovations **130** from Solution-Providers **113**, **114**, **115** after the results and interoperability of the Innovation has been tested and established. As such, the Intermediary **112** verifies that the Innovation meets the needs of the Innovation-Seeker **110**, **111**. Innovation-Seekers **110**, **111** further benefit by having access to a potentially vast pool of leading talent that provides novel ideas, and by providing a mechanism to extend investment in existing systems and satisfy capacity issues without hiring additional staff. Thus, the Open-Innovation Network **150** enables the Innovation-Seekers **110**, **111** to generate higher-value innovation by drawing on knowledge distributed geographically.

[**0096**] According to an embodiment of the present invention, the Open-Innovation Network **150** enables the Solution-Providers **113**, **114**, **115** an opportunity to work on real problems, a means to develop a reputation while not working directly for a firm, a means to monetize ideas, access to Innovation-Seekers **110**, **111**, a simplified interface and workflows allowing focus to remain on developing Solutions **122** and New-to-the-World Innovations **130**, a repository allowing quick access to past work, help refining and validating Solutions **122** and New-to-the-World Innovations **130** with industry experts, access to a large pool of talented collaborators, and a sense of community. For potential

Solution-Providers **113**, **114**, **115**, the Open-Innovation Network **150** offers an efficient and financially attractive method to make the most of their expertise.

Section 2: Exemplary Methods and Systems According to the Present Invention

[**0097**] This section provides examples illustrating the systems and methods of the present invention. Example 1 describes the operation of an exemplary embodiment of the present invention wherein an Innovation-Seeker defines a new Need-Based Problem, according to an embodiment of the present invention. Example 2 describes the operation of an exemplary embodiment of the present invention wherein an Innovation-Seeker defines and submits a Guidance, according to an embodiment of the present invention. Example 3 describes the operation of an exemplary embodiment of the present invention wherein a Solution-Provider creates a New-to-the-World Innovation, according to an embodiment of the present invention. Example 4 describes the operation of an exemplary embodiment of the present invention wherein a Solution-Provider initiates a new Project, according to an embodiment of the present invention. Example 5 describes the operation of exemplary embodiment of the present invention wherein a Solution-Provider system-tests a Solution to a previously defined Innovation-Seeker Problem, according to an embodiment of the present invention. Example 6 describes the operation of exemplary embodiment of the present invention whereby an Innovation-Seeker acceptance-tests a Solution, according to an embodiment of the present invention.

EXAMPLE 1

[**0098**] Example 1 is described in connection with FIG. **2**. FIG. **2** depicts a workflow diagram showing a flow of operation of an exemplary embodiment of the present invention wherein an Innovation-Seeker defines a new Need-Based Problem. The two straight dotted lines **240***a*, **240***b* depict a delineation of responsibilities between the Innovation-Seeker **210**, the Liaison **211**, and the Solution-Provider community **212**.

[**0099**] As shown in FIG. **2**, an Innovation-Seeker **210** navigates the Internet or other suitable network to the Login interface **215** of the Open-Innovation Network **200**. According to an embodiment of the present invention, the Innovation-Seeker **210** may log into the Open-Innovation Network **200** using a previously assigned system username and/or password.

[**0100**] Once logged in, the Innovation-Seeker **210** is presented with the Home page **217** that provides a "New Problem" button or link. The Innovation-Seeker **210** clicks on a "New Problem" button or link on the Home page **217**. The Innovation-Seeker **210** is then presented with a Terms of Use page **221** that details the conditions under which the Innovation-Seeker **210** is agreeing to use the system. The Terms of Use page **221** may require that the Innovation-Seeker **210** click "Accept" or "Do Not Accept," in order to advance to the next stage of the process.

[**0101**] If the Innovation-Seeker **210** clicks "Do Not Accept", he or she is returned to the Home page **217** and presented with a message indicating that he or she may not enter a problem into the Open-Innovation Network **200** without first agreeing to the conditions for system use and is given the choice of returning to the Home page **217**.

[**0102**] If the Innovation-Seeker **210** clicks "Accept" on the Terms of Use page **221**, he or she is then presented with a form for entering a request for the creation of an Innovation, referred to as the Problem page **220**, which may include, but is not limited to, the following exemplary fields:

TABLE 1

Exemplary Problem page 220

Field	Field Description
Problem Id	A unique problem id.
Title	The problem title.
Description	A detailed Need-Based Problem description (including the expected outcome). Alternatively, this field can be used for an abstract, while longer descriptions can be uploaded as Supporting Documentation 224.
Terms and Conditions	The terms and conditions under which a Solution to this problem will be accepted (e.g. details of license or purchase agreements), as well as the monetary amount to be disbursed by the Innovation-Seeker upon acceptance of a Solution.
End Date	The date by which a Candidate-Innovation will be completed and ready for examination by an Innovation-Seeker.
Keywords	Searchable full text keywords that will facilitate the discovery of this problem by qualified Solution-Providers.
Profile (Taxonomy Fields)	This will encompass a number of Open-Innovation Network defined industry and problem specific fields to be used for further classifications (e.g. Music Genre, Required Instrumentation, etc.).

Fields in italics are system-generated. All others are input by the user.

[**0103**] Once the fields on the Problem page **220** are completed and/or populated, the Innovation-Seeker **210** clicks on a "Submit" button. At this point, the system places the Problem into "Problem in Draft" status **222**.

[**0104**] The Innovation-Seeker **210** is then presented with the Upload page **223**, which may be used to upload additional files such as, for example, a lengthy, fully detailed problem description, herein referred to as Supporting Documentation **224**, onto a computer or server **226** of the Intermediary/Liaison **211**. Example 6 describes in greater detail the process of uploading Supporting Documentation **224**.

[**0105**] Once the Innovation-Seeker **210** has completed uploading files (or if he or she elects not to upload additional

files), he or she clicks the "OK" button on the Upload page **223**. At this point, the system places the Problem into "Problem Ready for Review" status **227** and a Liaison **211** with the appropriate expertise (which is determined primarily by the Problem's profile as indicated on the Problem page **220**) is alerted by the system that a new Problem is awaiting review.

[**0106**] According to an embodiment of the present invention, the Liaison **211** logs into the Review Problem page **233** after receiving the new Problem alert. The Liaison **211** reviews **228** the problem to determine if the problem or request for the creation of digital media is "acceptable" by considering criteria including, but not limited to: completeness, clarity, solvability and/or commercial potential.

[**0107**] If the problem is unacceptable (e.g., not sufficiently described or defined), the Liaison **211** may provide feedback **231** indicating how the problem may be made acceptable, and clicks on "Not Accepted" button on the Review Problem page **233**. At this point, the system places the Problem into "Problem Changes Required" status **232** and the system alerts the Innovation-Seeker **210** that the problem must be modified to place it in condition for acceptance.

[**0108**] Once alerted that changes are required, the Innovation-Seeker **210** accesses the Problem page **220**, which may be pre-populated with problem values and includes feedback **231**. Once the Innovation-Seeker **210** has completed changes to the problem and the Supporting Documentation **224** has been uploaded (if necessary) using the Upload page **223**, the system places the Problem back into "Problem Ready for Review" status **227** and the workflow continues as before.

[**0109**] Once the problem is acceptable, the Liaison **211** clicks on "Accepted" button on the Review Problem page **233**. At this point, the system places the problem into "Problem Ready for Community" status **229**, which makes the Problem **230** available to the entire Solution-Provider community **212**, by transferring of the problem description onto an Open-Innovation Network **200** computer server (not shown) where it may be accessed by the Solution-Provider community **212**.

EXAMPLE 2

[**0110**] This example is illustrated in FIG. **3**. FIG. **3** depicts a workflow diagram showing a flow of operation of an exemplary embodiment of the present invention wherein an Innovation-Seeker defines the Guidance. The two straight dotted lines **340**A, **340**B depict a delineation of responsibilities between the Innovation-Seeker **310**, the Liaison **311**, and the Solution-Provider Community **312**.

[**0111**] As shown in FIG. **3**, an Innovation-Seeker **310** navigates the Internet or other network to the Login page **315** of the Open-Innovation Network **300**. The Innovation-Seeker **310** may then log into the Open-Innovation Network **300** using a previously assigned username and/or password.

[**0112**] Once logged in, the Innovation-Seeker **310** is presented with the Home page **317** which contains a "New Guidance" button or link. The Innovation-Seeker **310** clicks on a "New Guidance" button or link on the Home page **317**.

[**0113**] The Innovation-Seeker **310** is then presented with a Guidance page **320**, which may include, but is not limited to, the following exemplary fields:

TABLE

Representative Guidance page 320

Field	Field Description
Guidance Id	A unique Guidance id.
Title	The Guidance title.
Description	Narrative describing general areas of commercial interest.
Keywords	Searchable full text keywords that will facilitate the discovery of this Guidance by qualified Solution-Providers.
Profile (Taxonomy Fields)	This will encompass a number of Open-Innovation Network defined industry and Guidance specific fields to be used for further classifications.

Fields in italics are system-generated. All others are input by the user.

[**0114**] Once Innovation-Seeker **310** completes the open fields on the Guidance page **320**, he or she clicks on a "Submit" button. At this point, the system places the problem into "Guidance Ready for Review" status **321** and a Liaison **311** with the appropriate expertise (which is determined primarily by the Guidance as indicated on the Guidance page **320**) is alerted by the system that new Guidance is awaiting review.

[**0115**] After receiving the new Guidance, the Liaison **311** then accesses the Review Guidance page **327**. As shown in step **322**, the Liaison **311** reviews the Guidance to determine if it is "acceptable," by considering criteria including, but not limited to: completeness, clarity and commercial potential.

[**0116**] If the Guidance is unacceptable, the Liaison **311** provides Feedback **331** indicating how the Guidance may be made acceptable, and clicks on "Not Accepted" button on the Review Guidance page **327**. At this point, the system places the Guidance into "Guidance Changes Required" status **325** and the system alerts the Innovation-Seeker **310** that the Guidance must be modified before being accepted.

[**0117**] Once alerted that changes are required, the Innovation-Seeker **310** logs into the Guidance page **320**. Once Guidance changes are complete, the system places the Guidance back into "Guidance Ready for Review" status **321** and the workflow continues as before.

[**0118**] Once the Guidance is acceptable, the Liaison **311** clicks on "Accepted" button on the Review Guidance page **327**. At this point, the system places the Guidance into "Guidance Ready for Community" status **323** which makes the Guidance **324** available to one or more Solution-Providers by allowing access to the Guidance description by all or a portion of the Solution-Provider community **312**.

EXAMPLE 3

[**0119**] Example 3 is described in connection with FIGS. **4***a* and **4***b*. Taken together, FIGS. **4***a* and **4***b* depict a flow of operation of an exemplary embodiment of the present invention wherein a Solution-Provider creates a New-to-the-World Innovation. The two straight dotted lines in FIGS. **4***a* and **4***b* (**450**A, **450**B) depict a delineation of responsibilities between the Innovation-Seekers **410**, **413**, the Liaison **411**, and the Solution-Providers **412**, **415**, **416**.

[0120] As is depicted in FIGS. **4***a* and **4***b*, a Solution-Provider **412** may post a New-to-the-World Innovation onto the Open-Innovation Network **400** according to a single-stage process (i.e., Stage **2**—identified as **402** in FIG. **4***b*) which begins when the team develops the Innovation **437**).

[0121] Optionally, the posting may be a two-stage process comprising Stage **1** (identified as **401**A, **401**B in FIG. **4***a*) and Stage **2** (identified as **402** in FIG. **4***b*). According to this embodiment of the present invention, the Solution-Provider **412** may begin with stage **1**A (**401**A in FIG. **4***a*) and post a New-to-the-World Innovation abstract and wait for interest in stage **1**B (**401**B in FIG. **4***a*) from an Innovation-Seeker **413** before continuing to stage **2** (**402** in FIG. **4***b*). Alternatively, the Solution-Provider **412** may begin with stage **2** (**402**) and post the entire Innovation without first posting an abstract (as may be the case if an Innovation already exists or if the Innovation-Seeker community has already expressed interest in the form of Guidance).

[0122] This example describes the entire two-stage process. Beginning with stage **1**A (**401**A), a Solution-Provider **412** navigates the internet to the Login page **415** of the Open-Innovation Network **400**. The Solution-Provider **412** logs into the Open-Innovation Network **400** using a previously assigned username and/or password.

[0123] Once logged in, the Solution-Provider **412** is presented with the Home page **417**, which includes a "New Innovation Abstract" button or link. Next, the Solution-Provider **412** clicks on a "New Innovation Abstract" button or link and is presented with an Innovation Abstract page **424**, which may include, but is not limited to, the following exemplary fields:

TABLE

Representative Innovation Abstract page 424

Field	Field Description
Abstract Id	A unique Innovation abstract id.
Title	The abstract title
Description	A narrative describing the Innovation including its intended use, as well as the digital type and format in which the Innovation is being offered (e.g. text, video, animation, or audio files).
Terms and Conditions	The terms and conditions under which the Innovation is being offered (e.g. details of license or purchase agreements), as well as the monetary amount sought by the Solution-Provider for the unmodified Innovation. Modifications to the Innovation are negotiated separately. (Note: If this example depicted the creation of a Solution to a Need-Based Problem, this field would be pre-populated with the Problem's Terms and Conditions).
Problem Id	Blank for this example. This field would otherwise indicate the specific Need-Based Problem this Innovation is being created to address.
Guidance Id	Blank for this example. This field could otherwise indicate the Guidance id this abstract's Innovation is being created to address.
Keywords	Searchable full text keywords that will facilitate the discovery of this Innovation by Innovation-Seekers.
Profile (Taxonomy Fields)	This will encompass a number of Open-Innovation Network defined industry and Innovation specific fields to be used for further classifications.

Fields in italics are system-generated. All others are input by the user.

[0124] Once the fields on the Innovation Abstract page **424** are completed or populated, the Solution-Provider **412** clicks on a "Submit" button. At this point, the system places the Innovation Abstract into "Abstract Ready for Review" status **423**, and a Liaison **411** with the appropriate expertise (which is determined based primarily on the Abstract's profile as indicated on the Innovation Abstract page **424**) is alerted by the system that a new Abstract is awaiting review.

[0125] The Liaison **411** logs into the Review Abstract page **418** after receiving the new Abstract alert. The Liaison **411** reviews the abstract to determine if it is "acceptable" by considering criteria including, but not limited to, completeness, clarity and commercial potential.

[0126] If the Abstract is deemed unacceptable, the Liaison **411** provides Feedback **425** indicating how the abstract could be made acceptable and clicks on "Not Accepted" button on the Review Abstract page **418**. At this point, the system places the abstract into "Abstract Changes Required" status **426** and the system alerts the Solution-Provider **412** that the abstract must be modified before being accepted.

[0127] Once alerted that changes are required, the Solution-Provider **412** logs into the Innovation Abstract page **424**, which may be pre-populated with abstract values. Once the Solution-Provider **412** completes the necessary changes to the abstract and the Solution-Provider **412** clicks on a "Submit" button on the Innovation Abstract page **424**, the system places the abstract back into "Abstract Ready for Review" status **423** and the workflow continues as before.

[0128] Once the abstract is deemed acceptable, the Liaison **411** clicks on "Accepted" button on the Review Abstract page **418**. At this point, the system places the abstract into "Abstract Ready for Community" status **421**, which makes the abstract **420** available to at least a portion of the Innovation-Seeker community **410**. One having ordinary skill in the art will appreciate that the Open Innovation Network **400** system functionality may be used to select a particular portion of the Innovation-Seeker community which is particularly suited for review and consideration of the abstract **420**. The Intermediary may select this portion of the community based on the nature and type of the innovation.

[0129] In Stage 1B (401B), an Innovation-Seeker **413** locates the abstract on the Open-Innovation network **400** by entering relevant search criteria on the Search page **427** and clicking the "Submit" button. The Innovation-Seeker **413** is then presented with a list of abstracts matching the search criteria, wherein each abstract may include summary information. The Innovation-Seeker **413** may then click on one of the results to display more information. At this point, the Innovation-Seeker **413** is presented with a fully-populated Innovation Abstract page **440** which displays the abstract's details including, but not limited to, a title, a description, terms of use, license or sale, award (i.e., the amount the Solution-Provider seeks in exchange for the Solution), a list of keywords, a profile, and a blank feedback text area. Optionally, the Innovation-Seeker **413** may complete the feedback field and clicks "Contact Solution-Provider" on the Innovation Abstract page **440**, which prompts the Open-Innovation Network **400** to send a message **428** indicating interest in the abstract to Solution-Provider **412**.

[0130] One having ordinary skill in the art will appreciate that the abstract may represent either existing Innovations, or conceptualizations of Innovations that do not yet exist, and as such, the workflow may branch in various directions. For example, if the Innovation exists, the Innovation-Seeker may license or purchase the Innovation "as is," or may pledge to license or purchase the Innovation after agreed upon modifications are completed. Alternatively, if the Innovation does not yet exist, the Innovation-Seeker may pledge to license or purchase the Innovation after its creation. In this example, it is assumed that the Innovation does not yet exist, but that the Innovation-Seeker has pledged to purchase it after its creation.

[0131] Referring to FIG. **4***b*, after the Solution-Provider **412** has been alerted that Innovation-Seeker **413** is interested in the abstract (as demonstrated in FIG. **4***a*), the process advances to Stage **2** (**402**). Knowing interest exists, the Solution-Provider **412** initiates a new Project and recruits a Development Team (i.e., a plurality of Solution-Providers **415**, **416** capable of performing the Project's or Problems' tasks), and develops a final solution/innovation, as shown in step **437**. The solution development process is described in greater detail in Example 4. The Solution-Provider **412** that initiates a new Project is the default Project Champion.

[0132] To begin work on the Innovation, the Project Champion **412** clicks on a "New Innovation" button or link on the Project page **441**. The Project Champion **412** is then presented with a Innovation page **442** which may include, but is not limited to, the following exemplary fields:

TABLE

Representative Innovation page 442

Field	Field Description
Innovation Id	A unique Innovation id.
Title	The Innovation title
Description	A narrative describing the Innovation including its intended use, as well as the digital type and format in which the Innovation is being offered (e.g. text, video, animation, or audio files). (Note: For this example, this field would be pre-populated as an abstract was created prior to the creation of this Innovation.)
Terms and Conditions	The terms and conditions under which the Innovation is being offered (e.g. details of license or purchase agreements), as well as the monetary amount sought by the Solution-Provider for the unmodified Innovation. Modifications to the Innovation are negotiated separately. (Note: If this example depicted the creation of a Solution to a Need-Based Problem, this field would be pre-populated with the Problem's Terms and Conditions).
Project Id	The id of the specific Project under which this Innovation was created.
Abstract Id	This field indicates the specific abstract that was created prior to the creation of this Innovation.
Problem Id	Blank for this example. This field would otherwise indicate the specific Need-Based Problem this Innovation is being created to address.
Guidance Id	Blank for this example. This field would otherwise indicate the Guidance id this abstract's Innovation is being created to address.
Keywords	Searchable full text keywords that will facilitate the discovery of this Innovation by Innovation-Seekers.
Profile (Taxonomy Fields)	This will encompass a number of Open-Innovation Network defined industry and Innovation specific fields to be used for further classifications.

Fields in italics are system-generated. All others are input by the user.

[0133] The Project Champion **412** would then populate the Innovation page **442** fields with Innovation details. As part of the Innovation development process, each member of the Development Team **414** (i.e., each Solution-Provider) is assigned a task to complete by the Project Champion **412**, based at least in part on the nature of the task and the competencies and/or skills of the Solution Provider. Once the Development Team members **414** have completed their assigned tasks and produced a task solution, the Project Champion **412** clicks the "Send Innovation for System Test" button on the Innovation page **442** to system test the innovation. This action places an electronic copy of the New-to-the-World Innovation **436** into a System Test environment **435** where the Development Team members **414** can ensure the New-To-The-World Innovation **436** is com-

patible with the System Test environment **435**. Example 5 provides a more detailed description of the system-testing process.

[**0134**] Once the New-to-the-World Innovation **436** is compatible with the System Test environment **435** and the Development Team members **414** consider the New-to-the-World Innovation **436** complete, the Project Champion **412** clicks the "Send Innovation for Review" button on the Innovation page **442**.

[**0135**] At this point in the process, the system places the Innovation into "Ready for Review" status **434** and a Liaison **411** with the appropriate expertise (which is determined primarily based on the profile indicated on the Innovation page **442**) is alerted by the system that a new Innovation is awaiting review.

[**0136**] The Liaison **411** logs into the Review Innovation page **443** after receiving the new Innovation alert and reviews the Innovation to determine if it is acceptable by considering criteria including, but not limited to, completeness, clarity and/or commercial potential.

[**0137**] If the Innovation is deemed unacceptable, the Liaison **411** provides Feedback **439** indicating how the Innovation may be improved and deemed acceptable, and clicks on a "Not Accepted" button on the Review Innovation page **443**. Next, the system places the Innovation into "Changes Required" status **438** and the system alerts the Project Champion **412** that the Innovation must be modified before being accepted.

[**0138**] Once alerted that changes are required, the Project Champion **412** logs into the Project page **441**, which may be pre-populated with Innovation values and feedback, and assigns tasks to Development Team members **414** to change, modify, or update the Innovation pursuant to the feedback. Once the Development Team members **414** have completed their assigned tasks and provided a refined task solution, system testing is performed. If the refined final solution is deemed acceptable, the Project Champion **412** clicks the "Send Innovation for Review" button on the Innovation page **442**. At this point, the system places the Innovation into "Ready for Review" status **434** and the workflow continues as before.

[**0139**] Once the Innovation is accepted, the Liaison **411** clicks on "Accepted" button on the Review Innovation page **443** and the system places the Innovation into "Acceptance Test" status **432**. Putting an Innovation into "Acceptance Test" status **432** causes the system to place a copy of the Innovation (now called a Candidate-Innovation **430**) onto a Staging Area **429**A for examination and assessment by one or more Innovation-Seekers **413**. According to an embodiment of the present invention, in the event no Innovation-Seeker **413** is interested in the Candidate-Innovation **430**, the system may place a copy of the Innovation **431** into Inventory **429**B. Example 6 provides a more detailed description of acceptance-testing of a final solution.

EXAMPLE 4

[**0140**] A Solution-Provider may initiate a new Project in response to a request for a solution to a Need-Based Problem or to create a New-to-the-World Innovation. In this example, it is assumed that the Solution-Provider is initiating a new Project to create a New-to-the-World Innovation. This example is described in connection with FIG. **5**. FIG. **5** depicts a workflow diagram showing the process flow of an exemplary embodiment of the present invention wherein a Solution-Provider/Project-Champion **511** creates a New-to-the-World Innovation. The two straight dotted lines **540**A, **540**B depict a delineation of responsibilities between the Solution-Provider/Project-Champion **511**, the Liaison **513**, and the Solution-Provider Community **512**.

[**0141**] As shown in FIG. **5**, a Solution-Provider **511** navigates the Internet or other suitable network to a Login page **516** of the Open-Innovation Network **500**. Next, the Solution-Provider **511** logs into the Open-Innovation Network **500** using a previously assigned username and/or password.

[**0142**] Once logged in, the Solution-Provider **511** is presented with the Home page **518**, which includes a "New Project" button or link. The Solution-Provider **511** clicks on a "New Project" button or link on the Home page **518**.

[**0143**] The Project Champion **511** (i.e., Intermediary or designated Solution-Provider) is then presented with a Project page **520** that may include, but is not limited to, the following exemplary fields:

TABLE

Representative Project page 520

Field	Field Description
Project Id	A unique Project id.
Title	The Project title.
Description	A narrative aimed at current and potential Solution-Providers describing the Project objectives.
Team Members	The Solution-Providers that have agreed to join the Project team. One or more team members will be designated as Project Champion.
Terms and Conditions	The terms under which license or purchase remuneration resulting from this Innovation will be divided among team members.
Start Date	The Project's official start date.
End Date	The date by which the resulting Innovation will be completed. (Note: If this example depicted the creation of a Solution to a Need-Based Problem, this field would be pre-populated with the Problem's End Date).
Problem Id	Blank for this example. This field would otherwise indicate the specific Need-Based Problem this Innovation is being created to address.
Guidance Id	Blank for this example. This field would otherwise indicate the Guidance id this Innovation is being created to address.

TABLE-continued

Representative Project page 520	
Field	Field Description
Keywords	Searchable full text keywords that will facilitate the discovery of this Project by Solution-Providers.
Profile (Taxonomy Fields)	This will encompass a number of Open-Innovation Network defined industry and Innovation specific fields to be used for further classifications.

Fields in italics are system-generated. All others are input by the user.

[0144] The Project Champion **511** then populates the Project page **520** fields with a details relating to the Project. Once the Project page fields **520** have been populated and saved, the system makes the "Upload Supporting Documents" button or link (to upload additional files **536** that further explain the Project onto an Intermediary computer server **534**) viewable. The Project Champion **511** clicks on the "Upload Supporting Documents" button or link and is presented with the Upload page **528**. Once the Project Champion **511** has completed uploading files **536** (or if he or she chooses not to upload additional files), he or she clicks the "OK" button on the Upload page **528** and the system puts the Project into "Project in Draft" status **522**.

[0145] If other Development Team members are necessary, the Project Champion **511** may invite the appropriate Solution-Providers to join the Development Team for completion of the Project, as shown in step **524**. According to an embodiment of the present invention, the Project Champion **511** invites the other Solution Providers to join the Project by searching keywords and user profile (taxonomy) fields of registered users from the Solution-Provider Community **512** on the Search page **525**. Using the search results on the Search page **525**, the Project Champion **511** identifies the plurality of qualified Solution Providers, based at least in part on the nature of the tasks of the Project, and invites them to join the Project by clicking the "Send Invitation to Join" button or link next to the appropriate Solution-Provider. This action directs the system to send an electronic message to the Solution-Provider with the Project details and invites the Solution-Provider to join the Project and the selected Solution-Providers join the Project, as shown in step **526**.

[0146] Once all the required fields on the Project page **520** are populated and the Development Team is complete, the system makes the "Assign Tasks" button or link viewable to allow the Project Champion **511** to assign the tasks to each individual Development Team member. One having ordinary skill in the art will appreciate that the Project Champion **511** may assign one or more tasks to himself or herself, if appropriate.

[0147] The Project Champion **511** may then click on the "Assign Tasks" button or link on the Project page **520** to access a Task page **527** that may include, but is not limited to, the following exemplary fields:

TABLE

Representative Task page 527	
Field	Field Description
Task Id	A unique task id.
Project Id	A Project id to which this task belongs.
Title	The task title.
Description	A narrative describing the task and objectives.
Team Member	The Solution-Provider that is responsible for completing this task.
Start Date	The task's official start date.
End Date	The date by which the task must be completed.

Fields in italics are system-generated. All others are input by the user.

[0148] Once the fields have been completed and/or populated and saved on the Task page **527**, the Project Champion **511** has the option to assign another task, or to return to the Project page **520**.

[0149] Once all tasks have been assigned, the Project Champion **511** clicks on the "Submit Project" button or link on the Project page **520** and the system puts the Project in "Project in Progress" status **532**, and work on the Project proceeds.

EXAMPLE 5

[0150] This example is described in connection with FIG. **6**. FIG. **6** depicts a process flow of an exemplary embodiment of the present invention wherein a Solution-Provider system-tests a Solution (which in this example is a Java computer program) to a previously defined Innovation-Seeker problem. In FIG. **6**, the straight dotted line **610** depicts a delineation of responsibilities between the Solution-Provider **620** and the Liaison **640**.

[0151] System-testing is a function performed on the Open-Innovation Network **600**, and involves a Solution-Provider **620** submitting an Innovation through a series of tests to determine whether the Innovation can be run within the Open-Innovation Network **600**. According to an embodiment of the present invention, one or more of the Solution Providers performs the system-testing.

[0152] Performing the system-tests ensures that the Innovation conforms to a given set of standards defined by the Open-Innovation Network **600**, and creates a single deliverable item (e.g., a set of digital files), which can easily be transferred and executed on different systems running a similar environment.

[0153] According to an embodiment of the present invention, system-testing is divided into two parts: Acquisition **670** (i.e., the process of obtaining the Innovation from the Solution-Provider) and Compliance Testing **675** (i.e., the process of determining the integrity and validity of the acquired Innovation).

[0154] As shown on FIG. **6**, for this example, Acquisition **670** begins with the Solution-Provider **620** initiating the Innovation system-testing process from within the Problem Repository page **621**. One having ordinary skill in the art will appreciate that Innovations not associated with a specific problem may be initiated from a different, albeit similar page. In this example, the Solution-Provider **620** is system-testing an Innovation that is associated with a specific problem. Thus, the Innovation is referred to as a "Solution" for the remainder of the example.

[0155] The Problem Repository page **621** lists different problems that have been previously defined by Innovation-Seekers (not shown). From within the Problem Repository page **621**, the Solution-Provider **620** has a choice of submitting an existing Solution from within his or her computer or writing a Solution directly from within the web browser (the latter option is most appropriate for less complicated Solutions that do not require changes to the Open-Innovation Network's **600** default data access routines).

[0156] Choosing to submit an existing Solution brings the Solution-Provider **620** to the Upload Solution page **622**, which contains an "Upload" button and file browser field. The Solution-Provider **620** selects the Solution from within his computer system and clicks on the 'Upload' button to upload the Solution **641** (i.e., a set of digital files) to System Test **634**. The system then presents the Solution-Provider **620** with the View/Define Parameters page **624**.

[0157] The View/Define Parameters page **624** shows the current Solution **641** parameters contained within a Parameter file (for this example, the Input Data Structure and Output Data Structure parameters were previously defined by the Innovation-Seeker). The following table sets forth an exemplary Parameter file, according to an embodiment of the present invention:

TABLE

Exemplary Parameter File

Parameter	Parameter Description
Innovation Id	A unique Innovation Id.
Problem Id	A problem id that associates the Innovation to a specific, predefined problem - as is the case with this example. A unique problem id is system-generated every time an Innovation-Seeker submits a problem to the Open-Innovation Network 600. This field would be empty if the Solution-Provider were submitting a New-to-the-World Innovation.
Class Name	For this example, the Java class name of the Innovation submitted.
Title	A generic and descriptive Innovation name, than is provided with the Class Name.
Description	A description of the Innovation, which may include a simple explanation of how it works or more detailed information.
Input Data Structure	A collection of input file structures describing the number and type of input data sources to the Innovation. This structure may be defined a number of ways, including: system-generated based on data submitted by the Innovation-Seeker when defining the problem, or based on data used by the Solution-Provider when developing the Innovation. This structure may also be manually defined by the Innovation-Seeker or by the Solution-Provider.
Output Data Structure	Similar to above, a collection of output file structures describing the number and type of output data returned by the Innovation.

Parameters in italics are system-generated. All others are input by the user.

[0158] In this example, the View/Define Parameters page **624** includes, but is not limited to, 'Save Changes' and 'Next' buttons, and presents the Input and Output Data Structure information previously defined for the problem by the Innovation-Seeker (not shown).

[0159] Clicking the 'Save Changes' button on the View/Define Parameters page **624** saves changes to the Input and Output Data Structure information to the Parameter file. Clicking the 'Next' button the View/Define Parameters page **624** initiates a parameters check. If the Solution-Provider **620** made changes to the data specifications that had been previously defined by the Innovation-Seeker and/or if the parameters are not correct **632**, the Solution-Provider **620** must define and/or correct the parameters through the Change Parameters page **625**, and may repeat through several cycles until the parameters have been completely and correctly defined.

[0160] According to an embodiment of the present invention, if the Solution-Provider **620** decides to enter the Solution directly from within the web browser (not shown in this example), he or she may be directed to the Enter Code page **623**, which contains a multi-line text field where he or she can enter the Solution. According to an embodiment of the present invention, two buttons are presented on the Enter Code page **623**: 'Save Changes' and 'Next'. The 'Save Changes' function allows the Solution-Provider **620** to save changes to the Solution to System Test **634**. By clicking on

the 'Next' button, the Solution-Provider **620** is directed to the View/Define Parameters page **624**.

[**0161**] Once the Solution's parameters have been completely defined and are correct, clicking on the 'Next' button on the bottom of the View/Define Parameters page **624** initiates the transfer of the Parameter file **642** to the System Test **634**. At this point the Solution **641** has reached the Solution Ready state **633**, at which point it is ready for Compliance Testing **675**.

[**0162**] The Solution-Provider **620** is then presented with the Test Solution **626** page, which contains a 'Test' button and a message indicating that the Solution **641** is ready for Compliance Testing **675**.

[**0163**] According to an embodiment of the present invention, Compliance Testing **675** comprises a series of operations that determine the integrity and validity of the acquired Solution **641**, and is divided into two major stages: Compilation **635** and Structural Analysis **637**. The Compilation **635** stage determines the standards compliance of the Solution **641** and detects any coding errors. The Structural Analysis **637** stage tests the structure of the compiled Solution **641** and compares it to what is defined in the associated Parameter file **642**.

[**0164**] Once the Solution-Provider **620** clicks on the Test Solution **626** page's 'Test' button, the system processes the Solution **641** through the first phase of the system-testing process: Compilation **635**. If a Solution **641** does not compile, it means that it was not inherited from a predefined Java base class (for this example), or that the source code has syntactical errors. These errors are then visually presented via Feedback **636** (e.g., a detailed error page) to the Solution-Provider **620** for review, edit and re-submission of the Solution.

[**0165**] Once the Solution **641** passes Compilation **635** (that is, the Solution **641** compiles and is free of syntactical errors), the second phase of the system-testing process, Structural Analysis **637**, takes place. The Structural Analysis stage tests the structure of the compiled Solution **641** and compares it to what is defined in the associated Parameter file **642**.

[**0166**] For this example, the Solution **641** is loaded as an instance of the Java base class, again to make sure it was inherited from the standard base Java class. Then the system analyzes the instantiated Solution **641**, checking that the number and type of inputs and outputs used by the source code match the specifications defined in the Parameter file **642**. If any errors are detected, they are again reported back to the Solution-Provider **620** through Feedback **636** (i.e., the compiler error is redirected to the screen).

[**0167**] Once the Solution **641** passes the Structural Analysis **637** stage, the Solution-Provider **620** is informed via the Results page **627**. From here, the Solution-Provider is presented with the option to post the Solution **650** for the Liaison **640** to review.

EXAMPLE 6

[**0168**] This example is described in connection with FIG. **7**. FIG. **7** depicts an exemplary process flow of an embodiment of the present invention wherein an Innovation-Seeker performs acceptance-testing on a Solution-Provider's Solution.

[**0169**] After a Solution has been created and system-tested by a plurality of Solution-Providers (as described in Example 5), it is made available for acceptance-testing in the Staging Area **730** by one or more Innovation-Seekers on the Open-Innovation Network **700**.

[**0170**] The purpose of acceptance-testing is for Innovation-Seekers to determine whether a particular Innovation meets criteria set forth by a predefined problem, and/or is otherwise commercially valuable. Generally, Innovation-Seekers acceptance-test an Innovation by submitting data to the Staging Area **730**, running the data through the Solution, and analyzing the results.

[**0171**] The following describes a flow of operation wherein an Innovation-Seeker acceptance-tests a Solution-Provider's Solution (which is a Java computer program in this example). The straight dotted line **710** shown in FIG. **7** depicts a delineation of responsibilities between the Innovation-Seeker **720** and the Liaison **740**.

[**0172**] As shown on FIG. **7**, for this example, acceptance-testing begins with the Innovation-Seeker **720** initiating the process from within the Solution Repository page **721**. The Solution Repository page **721** contains a list of problems and associated Solutions (note: Innovations not associated with a specific problem would be initiated from a different, albeit similar page).

[**0173**] From the Solution Repository page **721**, the Innovation-Seeker **720** selects a Solution to be tested by (for instance) double-clicking on the Solution. Once a Solution is selected, the Innovation-Seeker **720** is directed to the Upload Test Data page **722**, which contains a file browser field to select Test Data from his computer or computer network (for this example).

[**0174**] According to an embodiment of the present invention, the Innovation-Seeker **720** may upload various types of data for testing, from a simple comma-separated value (CSV) file to binary data files taken directly from database management systems. For data that originates from databases, data readers that interface directly with the databases streamline the acceptance-testing process by requiring minimal amounts of data massaging.

[**0175**] After choosing Test Data, the Innovation-Seeker **720** clicks on an 'Upload' button on the Upload Test Data page **722** to continue with the process. If the Test Data file is supported by the system **731**, the Test Data **738** is uploaded into the Staging Area **730**. As the Test Data **738** is uploaded, the system converts the raw data to a standardized structure, which may be generically processed by the Solutions, regardless of the original format. To do this, the system determines the file type and format, and initiates the appropriate file reader to process the data format. Another (data-type specific) system process then analyzes the data in order to determine its structure—thereby minimizing data conversion problems caused by human error.

[**0176**] For example, delimited values are determined due to the frequency of certain delimiters, such as, for example, commas, tabs, or other like symbols. Eventually, the process yields a simple description of the data in terms of column headers and column data types.

[**0177**] If the uploaded Test Data **738** is either not in the correct format (i.e., corrupted) or unsupported, a Feedback

732 is sent back to the Innovation-Seeker **720** indicating problems with the data analysis process. The Innovation-Seeker **720** is then presented with an Upload Test Data page **722** so that he or she may re-upload the Test Data or upload another set of data.

[**0178**] Once the system recognizes the type and structure of the uploaded Test Data **738**, the system places the Solution into a Test Data Available state **733**, and the structure of the Test Data **738** (as determined by the system) is displayed on the View Data Structure page **723**. Here, the Innovation-Seeker **720** has a chance to review the resulting structure of the Test Data **738** and make changes if there are any errors. The Innovation-Seeker **720** then determines if the data's structure is correct **734**. If the structure is not correct, the Innovation-Seeker **720** clicks on the "Edit" button that appears on the View Data Structure page **723**. The Innovation-Seeker **720** is then presented with the Edit Structure page **724** to make corrections to the structure of the Test Data **738**.

[**0179**] Once corrections are complete, the Innovation-Seeker **720** clicks on the "Complete" button and is presented with the View Data Structure page **723**. From the View Data Structure page **723**, the Innovation-Seeker **720** clicks on the 'Next' button when the structure of the Test Data **738** has been correctly defined. The system then saves a Data Structure file **737** to the Staging Area **730**, and places the Solution into a Structured Test Data state **735**, indicating data is now available to acceptance-test the Solution, as well as a data definition file (i.e., Data Structure file **737**) describing how to access the Test Data **738**.

[**0180**] The Innovation-Seeker **720** is then presented with the Ready To Test page **725**. Clicking on the 'Test Solution' button from this page causes the system to load the Solution **741** into memory of the Staging Area **730**. Then, using the Data Structure file **737**, the system inputs the Test Data **738** into the Solution **741**. Optionally, because some Solutions may take longer to complete (e.g., five seconds or more, depending on the amount of test data and complexity of the Solution), an animated progress indicator of colored bars scanning across a page along with instructions not to interrupt the process is displayed.

[**0181**] Once the Solution **741** has completed its execution, a portion of the results is displayed on the Results page **726**, and the full Results Files **739** are saved onto the Staging Area **730**. Optionally, in the event the output of the Solution is large, only the first few data results (e.g., fifty or less) may be displayed on the Results page **726**, and appear as colored tables with column headers clearly marked and rows in alternating light and dark colors for better readability. The full Results Files **739** may be accessed from the Staging Area **730** by the Innovation-Seeker **720** as downloadable files in several standard formats including compressed file formats such as, for example, in a ZIP or RAR file formats.

[**0182**] The Innovation-Seeker **720** can then analyze results and confirm the correctness **736** of the Solution **741**. If the results are correct, the Innovation-Seeker **720** clicks on the "Correct" button at the bottom of the Results page **726**, thereby confirming the Solution **741** has completed the acceptance-test process. At this point, the Solution **741** is marked as 'valid,' and the Innovation-Seeker **720** is presented with an option to purchase the Solution **741**. If he or she chooses to do so, an Order Request **750** is sent to the Liaison **740**. If the Innovation-Seeker **720** does not wish to purchase the Solution **741** at this time, the Solution **741** remains available through the Solution Repository **721**.

[**0183**] Alternatively, if the Solution results are erroneous or inconsistent, the Innovation-Seeker **720** may click on the 'Deny' link at the bottom of the Results page **726**. The Innovation-Seeker **720** may then be directed to a Feedback form **727** to leave comments about the failure of the Solution **741**. This Result Feedback **751** is eventually sent back to the Solution-Provider (i.e. the creator of the Solution **741**—not shown here) as insight on how to further refine the Solution **741**.

Section 3: An Exemplary System Architecture of the Invention

[**0184**] An exemplary system architecture of the invention is described below in connection with FIG. **8**. According to an embodiment of the present invention, the Open-Innovation Network system **800** may be comprised at least in part of off-the-shelf software components and industry standard multi-tier (a.k.a. "n-tier", where "n" refers to the number of tiers) architecture designed for enterprise level usage. One having ordinary skill in the art will appreciate that a multi-tier architecture includes a user interface, functional process logic ("business rules"), data access and data storage which are developed and maintained as independent modules, most often on separate computers.

[**0185**] According to an embodiment of the present invention, the system architecture of the Open-Innovation Network **800** comprises a Presentation Logic Tier **810**, a Business-Logic Tier **815**, a Testing Tier **817**, a Data-Access Tier **820**, and a Data Tier **825**.

[**0186**] The Presentation Logic Tier **810** (sometimes referred to as the "Client Tier") comprises the layer that provides an interface for an end user (i.e., an Innovation-Seeker and/or a Solution-Provider) into the application (e.g., session, text input, dialog, and display management). That is, the Presentation Logic Tier **810** works with the results/output **860**, **862** of the Business Logic Tier **815** to handle the transformation of the results/output **860**, **862** into something usable and readable by the end user's client machine **830**, **835**. Optionally, a user may access the Open-Innovation Network system **800** using a client machine **830** that is behind a firewall **870**, as may be the case in many user environments.

[**0187**] The Open-Innovation Network system **800** uses Web-based user interfaces, which accept input and provide output **860**, **862** by generating web pages that are transported via the Internet through an Internet Protocol Network **880** and viewed by the user using a web browser program on the client's machine **830**, **835**.

[**0188**] According to an embodiment of the present invention, the Presentation Logic Tier **810** may also include a proxy **875** that is acting on behalf of the end-user's requests **860**, **862** to provide access to the Business Logic Tier **815** using a standard distributed-computing messaging protocol (e.g., SOAP, CORBA, RMI, DCOM). The proxy **875** allows for several connections to the Business Logic Tier **815** by distributing the load through several computers. The proxy **875** receives requests **860**, **862** from the Internet client machines **830**, **835** and generates html using the services provided by the Business Logic Tier **815**.

[0189] The Business Logic Tier **815** contains one or more software components **840** for business rules, data manipulation, etc., and provides process management services (such as, for example, process development, process enactment, process monitoring, and process resourcing).

[0190] In addition, the Business Logic Tier **815** controls transactions and asynchronous queuing to ensure reliable completion of transactions, and provides access to resources based on names instead of locations, and thereby improves scalability and flexibility as system components are added or moved. The Business Logic Tier **815** works in conjunction **866** with the Data Access Tier **820** to manage distributed database integrity. The Business Logic Tier **815** also works in conjunction **864**, **865** with the Testing Tier **817** to assess Innovations and examine results.

[0191] Optionally, according to an embodiment of the present invention, the Business Logic Tier **815** may be located behind a firewall **872**, which is used as a means of keeping critical components of the Open-Innovation Network **800** secure. That is, the firewall **872** may be used to filter and stop unauthorized information to be sent and received via the Internet-Protocol network **880**.

[0192] According to an embodiment of the present invention, the Testing Tier **817** is composed of two computer environments: System Test **817**A and Staging Area **817**B. The System Test area **817**A is a computing environment wherein Solution-Providers assess Innovations for Open-Innovation Network **800** computer system compatibility. The Staging Area **817**B is a computing environment wherein Innovation-Seekers run Innovations and examine results to ensure said Innovations meet predefined criteria or are otherwise commercially valuable.

[0193] Access **864**, **865** to the Testing Tier **817** is strictly controlled and coordinated by functionality found in the Business Logic Tier **815**, without any direct interaction with Solution-Providers or Innovation-Seekers.

[0194] Software components **840** in the Business Logic Tier **815** determine what is moved to Testing Tier **817** and what actions are performed. For example, an Innovation-Seeker that needs to acceptance-test a particular Innovation may specify the Innovation and associated data—software components **840** in the Business Logic Tier **815** that manage the loading of the correct Innovation, accessing the necessary data **866** from the RDBMS **850**, and running the Innovation in the Staging Area **817**B environment.

[0195] According to an embodiment of the present invention, the Testing Tier **817** is situated on a different computer from the Business Logic Tier **815** for added performance and security.

[0196] From a performance perspective, separate computers dedicated to testing and executing/running Innovations provides several benefits. Testing Innovations may be computer-processor intensive, thus requiring higher-performance for the Testing Tier **817** than for the Business Logic Tier **815**. In addition, by isolating complex Innovations within the Testing Tier **817** environment, a high priority to execute code may be assigned and access may be granted to all the system resources required in order to perform calculations.

[0197] Isolating the Testing Tier **817** on a separate computer server also provides a cushion of security from potential damage to the entire Open-Innovation Network **800** that could be caused by incorrectly, or maliciously coded Innovations. Testing Tier **817** isolation minimizes the risk such failures may affect the entire Open-Innovation Network **800**.

[0198] The Data-Access Tier **820** is a reusable interface that contains generic methods **845** to manage the movement **867** of Data **850**, Documentation **852**, and related files **851** to and from the Data Tier **825**. The Data-Access Tier **820** contains no data or business rules, other than some data manipulation/transformation logic to convert raw data files into structured data that Innovations may use for their calculations in the Testing Tier **817**.

[0199] The Data Tier **825** is the layer that contains the Relational Database Management System (RDBMS) **850** and file system (i.e., Documentation **852**, and related files **851**) and is only intended to deal with the storage and retrieval of information. The Data Tier **825** provides database management functionality and is dedicated to data and file services that may be optimized without using any proprietary database management system languages. The data management component ensures that the data is consistent throughout the distributed environment through the use of features such as data locking, consistency, and replication. As with the other tiers, this level is separated for added security and reliability.

[0200] It is to be understood that the exemplary embodiments are merely illustrative of the invention and that many variations of the above-described embodiments may be devised by one skilled in the art without departing from the scope of the invention. It is therefore intended that all such variations be included within the scope of the following claims and their equivalents.

What is claimed is:

1. An open-innovation network for facilitating the creation of digital media at the request of an innovation-seeker, comprising:

an intermediary communicatively connected to the innovation-seeker; and

a project-champion communicatively connected to the intermediary,

wherein the intermediary is configured to:

receive a request for the creation of digital media from the innovation-seeker, provide the request to the project champion,

receive a final solution comprising the requested digital media from the project champion,

facilitate the innovation-seeker's acceptance of the final solution, wherein the project-champion:

divides the request into the plurality of tasks,

based at least on the nature of each task, assigns each task to a solution-provider capable of performing the task to produce a plurality of task solutions,

performs system testing to confirm interoperability of the task solutions, and

combines the plurality of task solutions into the final solution.

2. The network of claim 1, wherein the intermediary may provide a toolset for the creation of the final solution to at least one of the project champion and the plurality of solution-providers.

3. The network of claim 1, wherein the intermediary facilitates an exchange of the final solution between the innovation-seeker and project-champion.

4. The network of claim 1, wherein the project-champion performs at least one task.

5. The network of claim 1, wherein the intermediary provides feedback to the innovation-seeker regarding the request for the creation of digital media.

6. The network of claim 5, wherein the request is refined by the innovation-seeker based at least in part on the feedback.

7. A method for facilitating the creation of digital media by a plurality of solution-providers at the request of an innovation-seeker, comprising the steps of:

receiving a request for the creation of digital media from the innovation-seeker;

dividing the request into the plurality of tasks;

based at least on the nature of each task, assigning a solution-provider capable of performing at least one task to develop at least one task solution for each task;

receiving the developed task solutions from the assigned solution-providers;

performing system testing to confirm interoperability of the developed task solutions;

combining the produced task solutions into a final solution; and

facilitating the innovation-seeker's acceptance of the final solution.

8. The method of claim 7, further comprising the step of providing the innovation-seeker with feedback regarding the request.

9. The method of claim 8, further comprising the step of receiving an updated request refined based at least in part on the feedback.

10. An open-innovation network for facilitating the exchange of a new-to-the-world innovation including digital media between at least one innovation-seeker and a plurality of solution providers collaborating to create the new-to-the-world innovation, the network comprising:

an intermediary communicatively connected to the at least one innovation-seeker, wherein the intermediary is configured to:

receive a guidance from the at least one innovation-seeker,

receive the new-to-the-world innovation from the communicatively connected plurality of solution-providers,

identify an innovation-seeker seeking the new-to-the-world innovation based on a comparison of the guidance and the new-to-the-world innovation, and

facilitate the exchange of the new-to-the world innovation between the plurality of solution providers and the identified innovation-seeker.

11. The network of claim 10, wherein the intermediary provides feedback regarding the guidance to at least one innovation-seeker.

12. The network of claim 10, wherein the intermediary facilitates the identified innovation-seeker's acceptance of the new-to-the-world innovation.

13. The network of claim 10, wherein the intermediary provides feedback to at least one of the plurality of solution-providers regarding the new-to-the-world innovation.

14. A method for exchanging digital media, comprising the steps of:

receiving a guidance from at least one innovation-seeker,

receiving the new-to-the-world innovation from the communicatively connected plurality of solution-providers,

identifying an innovation-seeker seeking the new-to-the-world innovation based on a comparison of the guidance and the new-to-the-world innovation; and

facilitating the exchange of the new-to-the world innovation between the plurality of solution providers and the identified innovation-seeker.

15. The method of claim 14, further comprising the step of providing feedback regarding the guidance to the at least one innovation-seeker.

16. The method of claim 14, further comprising the step of facilitating the identified innovation-seeker's acceptance of the new-to-the-world innovation.

17. The method of claim 14, further comprising the step of providing feedback to at least one of the plurality of solution-providers regarding the new-to-the-world innovation, wherein the feedback facilitates acceptance of the new-to-the-world innovation by the identified innovation-seeker.

* * * * *